INSTRUCTION MANUAL

700A Sensor Series

TELEDYNE DETCON, Inc.
4055 Technology Forest Blvd.,
The Woodlands, Texas 77381
Phone 713.559.9200

WWW.TELEDYNEGASANDFLAMEDETECTION.COM

1. ABOUT THIS GUIDE 8

2. ATEX OPERATIONAL GUIDELINES FOR SERIES 700A SENSORS 8

3. NAME PLATES 9

3.1 FP-700A 9
3.2 IR-700A 10
3.3 DM-700A 11
3.4 TP-700A 12
3.5 PI-700A 13

4. DETCON MODEL FP-700 14

4.1 INTRODUCTION 15
4.1.1 Description 15
4.1.2 Sensor Electronics Design 17
4.1.3 Modular Mechanical Design 18
4.1.4 Plug-in Replaceable Sensor 18
4.2 INSTALLATION 19
4.2.1 ATEX Operational Guidelines for Safe Use 19
4.2.2 Sensor Placement 20
4.2.3 Sensor Contaminants and Interference 22
4.2.4 Mounting Installation 23
4.2.5 Electrical Installation 24
4.2.6 Field Wiring 26
4.2.7 Initial Start Up 28
4.3 OPERATION 29
4.3.1 Programming Magnet Operating Instructions 29
4.3.2 Operator Interface 30
4.3.3 Normal Operation 31
4.3.4 Calibration Mode (AutoZero and AutoSpan) 32
4.3.5 Program Mode 35
4.3.6 Program Features 43
4.4 RS-485 MODBUS™ PROTOCOL 47
4.5 SERVICE AND MAINTENANCE 52
4.5.1 Calibration Frequency 52
4.5.2 Visual Inspection 52
4.5.3 Condensation Prevention Packet 52
4.5.4 Replacement of Plug-in Combustible Gas Sensor 53
4.5.5 Replacement of ITM 54
4.5.6 Replacement of FP-700 Sensor Assembly 55
4.6 TROUBLESHOOTING GUIDE 56
4.7 CUSTOMER SUPPORT AND SERVICE POLICY 60
4.8 FP-700 SENSOR WARRANTY 61
4.9 APPENDIX 62
4.9.1 Specifications 62
4.9.2 Spare Parts, Sensor Accessories, Calibration Equipment 65

5. DETCON MODEL IR-700 67

5.1 INTRODUCTION 68
5.1.1 Description 68
5.1.2 Sensor Electronics Design 70
5.1.3 Modular Mechanical Design 71
5.1.4 Plug-in Replaceable Sensor 71
5.2 INSTALLATION 72
5.2.1 ATEX Operational Guidelines for Safe Use 72
5.2.2 Sensor Placement 73
5.2.3 Sensor Contaminants and Interference 75
5.2.4 Mounting Installation 76
5.2.5 Electrical Installation 77
5.2.6 Field Wiring 79
5.2.7 Initial Start Up 81
5.3 OPERATION 82
5.3.1 Programming Magnet Operating Instructions 82
5.3.2 Operator Interface 83
5.3.3 Normal Operation 84
5.3.4 Calibration Mode (AutoZero and AutoSpan) 85
5.3.5 Program Mode 88
5.3.6 Program Features 97
5.4 RS-485 MODBUS™ PROTOCOL 101
5.5 SERVICE AND MAINTENANCE 105
5.5.1 Calibration Frequency 105
5.5.2 Visual Inspection 105
5.5.3 Condensation Prevention Packet 105
5.5.4 Replacement of IR Plug-in Combustible Gas Sensor 106
5.5.5 Replacement of ITM 106
5.5.6 Replacement of IR-700 Sensor Assembly 107
5.6 TROUBLESHOOTING GUIDE 108
5.7 CUSTOMER SUPPORT AND SERVICE POLICY 111
5.8 IR-700 SENSOR WARRANTY 112
5.9 APPENDIX 113
5.9.1 Specifications 113
5.9.2 Spare Parts, Sensor Accessories, Calibration Equipment 115

6. DETCON MODEL DM-700 117

6.1 INTRODUCTION 118
6.1.1 Description 118
6.1.2 Sensor Electronics Design 119
6.1.3 Modular Mechanical Design 120
6.1.4 Intelligent Plug-in Electrochemical Gas Sensor 120
6.2 INSTALLATION 121
6.2.1 ATEX Operational Guidelines for Safe Use 121
6.2.2 Sensor Placement 122
6.2.3 Sensor Contaminants and Interference 124
6.2.4 Mounting Installation 124
6.2.5 Electrical Installation 126
6.2.6 Field Wiring 128
6.2.7 Initial Start Up 130
6.3 OPERATION 132
6.3.1 Programming Magnet Operating Instructions 132
6.3.2 Operator Interface 133
6.3.3 Normal Operation 134
6.3.4 Calibration Mode 135
6.3.5 Program Mode 138
6.3.6 Program Features 144
6.4 RS-485 MODBUS™ PROTOCOL 147
6.5 SERVICE AND MAINTENANCE 152
6.5.1 Calibration Frequency 152
6.5.2 Visual Inspection 152
6.5.3 Condensation Prevention Packet 152
6.5.4 Replacement of Intelligent Plug-in Sensor 153
6.5.5 Replacement of ITM 154
6.5.6 Replacement of DM-700 Sensor Assembly 155
6.6 TROUBLESHOOTING GUIDE 156
6.7 CUSTOMER SUPPORT AND SERVICE POLICY 159
6.7.1 Warranty Notice 160
6.8 DM-700 SENSOR WARRANTY 161
6.9 APPENDIX 162
6.9.1 System Specifications 162
6.9.2 Interference Table 166
6.9.3 Proper Application and Maintenance of Acrylonitrile Sensor 177
6.9.4 Spare Parts, Sensor Accessories, Calibration Equipment 178

7. DETCON MODEL TP-700 180

7.1 INTRODUCTION 181
7.1.1 Description 181
7.1.2 Sensor Electronics Design 182
7.1.3 Modular Mechanical Design 183
7.1.4 Plug-in Replaceable Sensor 183
7.2 INSTALLATION 184
7.2.1 ATEX Operational Guidelines for Safe Use 184
7.2.2 Sensor Placement 184
7.2.3 Sensor Contaminants and Interference 186
7.2.4 Mounting Installation 187
7.2.5 Electrical Installation 188
7.2.6 Field Wiring 190
7.2.7 Initial Start Up 192
7.3 OPERATION 194
7.3.1 Programming Magnet Operating Instructions 194
7.3.2 Operator Interface 195
7.3.3 Normal Operation 197
7.3.4 Calibration Mode (AutoSpan) 197
7.3.5 Program Mode 200
7.3.6 Program Features 206
7.4 SERVICE AND MAINTENANCE 214
7.4.1 Calibration Frequency 214
7.4.2 Visual Inspection 214
7.4.3 Condensation Prevention Packet 214
7.4.4 Replacement of Plug-in H_2S Sensor 215
7.4.5 Replacement of ITM 216
7.4.6 Replacement of TP-700 Sensor Assembly 217
7.4.7 Replacement of the Bottom Housing 217
7.5 TROUBLESHOOTING GUIDE 218
7.6 CUSTOMER SUPPORT AND SERVICE POLICY 221
7.6.1 Warranty Notice 222
7.7 TP-700 SENSOR WARRANTY 223
7.7.1 Plug-in H_2S Sensor Warranty 223
7.7.2 ITM Electronics Warranty 224
7.7.3 Terms & Conditions 224
7.8 APPENDIX 225
7.8.1 Specifications 225
7.8.2 Spare Parts, Sensor Accessories, Calibration Equipment 227

8. DETCON MODEL PI-700 228

8.1 INTRODUCTION 229
8.1.1 Description 229
8.1.2 Sensor Electronics Design 230
8.1.3 Modular Mechanical Design 231
8.1.4 Intelligent Plug-in PID Gas Sensor 231
8.2 INSTALLATION 232
8.2.1 ATEX Operational Guidelines for Safe Use 232
8.2.2 Sensor Placement 232
8.2.3 Sensor Contaminants and Interference 234
8.2.4 Mounting Installation 234
8.2.5 Electrical Installation 236
8.2.6 Field Wiring 238
8.2.7 Initial Start Up 240
8.3 OPERATION 241
8.3.1 Programming Magnet Operating Instructions 241
8.3.2 Operator Interface 242
8.3.3 Normal Operation 243
8.3.4 Calibration Mode 244
8.3.5 Program Mode 248
8.3.6 Program Features 257
8.4 RS-485 MODBUS™ PROTOCOL 260
8.5 SERVICE AND MAINTENANCE 265
8.5.1 PID Plug-In Sensor Maintenance 265
8.5.2 Replacement of Intelligent Plug-in Sensor 273
8.5.3 Replacement of ITM 274
8.5.4 Replacement of PI-700 Sensor Assembly 275
8.6 TROUBLESHOOTING GUIDE 277
8.7 CUSTOMER SUPPORT AND SERVICE POLICY 281
8.8 PI-700 SENSOR WARRANTY 283
8.9 APPENDIX 284
8.9.1 Specifications 284
8.9.2 Gas Reference Table 286
8.9.3 Spare Parts, Sensor Accessories, Calibration Equipment 299

9. MODEL HRT BRIDGE 300

9.1 DESCRIPTION 301
9.2 INSTALLATION 302
9.2.1 Installation of HRT Bridge PCA 303
9.2.2 Connecting the HRT Bridge 303
9.3 OPERATION 304
9.4 OPERATOR INTERFACE 305
9.4.1 Device Menu 305
9.4.2 Diagnostics Menu 307
9.4.3 Device Setup Menu 310
9.5 SPECIFICATIONS 318
9.6 WARRANTY 319

10. MODEL HART-RAM MODULE 320

10.1 INTRODUCTION 321
10.1.1 Description 321
10.1.2 Installation 322
10.1.3 Field Wiring 325
10.2 OPERATOR INTERFACE 327
10.3 SET-UP AND NORMAL OPERATION 329
10.3.1 View Sensor Status 330
10.3.2 Set AutoSpan Level 331
10.3.3 Set Serial ID 331
10.3.4 Set-up for Relay Outputs 332
10.3.5 Signal Output Check 334
10.4 HART INTERFACE 335
10.5 HART OPERATION 336
10.6 HART OPERATOR INTERFACE 337
10.6.1 Device Menu 337
10.6.2 Diagnostics Menu 339
10.6.3 Device Setup Menu 341
10.7 HART-RAM ELECTRONICS WARRANTY 350
10.8 APPENDIX 351
10.8.1 Specifications 351
10.8.2 Spare Parts 352

11. MODEL RAM MODULE 353

11.1 INTRODUCTION 354
11.1.1 Description 354
11.1.2 Installation 355
11.1.3 Field Wiring 358
11.2 OPERATOR INTERFACE 361
11.3 SET-UP AND NORMAL OPERATION 363
11.3.1 View Sensor Status 363
11.3.2 Set AutoSpan Level 364
11.3.3 Set Serial ID 364
11.3.4 Set-up for Relay Outputs 365
11.3.5 Signal Output Check 366
11.4 RS-485 MODBUS™ PROTOCOL 367
11.5 RAM ELECTRONICS WARRANTY 368
11.6 SPECIFICATIONS 368
11.7 SPARE PARTS 369

12. REVISION LOG 370

1. About this guide

This guide provides information on all sensors in the 700 range.
To find out information on a sensor, go to the table of contents and locate the corresponding section.

2. ATEX operational guidelines for Series 700A sensors

Note: Block any unused ¾" (19mm) NPT holes with a proper plug. (Detcon P/N 8522-750)

Note: Install only where the ambient temperature at place of installation is within the rated temperature limits of this device -40°C to +70° C (FP, TP, and IR-700A), -40°C to +55° C (DM-700A), and -20°C to +55° C (PI-700A).

Note: All devices connecting to the ¾" (19mm) NPT conduit entries must be tightened to a minimum of 16 Foot-Pounds torque (22Nm).

Note: The flamepath joints are not intended to be repaired if damaged.

Note: For ATEX use, cable glands, adapters, and/or blanking elements shall be ATEX certified to Ex IIC and shall be installed.

Warning: Cables and cable glands must be rated for ≥ 90°c.

Note: Use internal and external grounding points as required or recommended by electrical installation guidelines. Tighten to full hand-tight or 12 Foot-Pounds torque (17Nm).

Note: Connected earth wire to crimped terminal (≥4mm^2) (internal and external ground points).

II 2 G Ex db ib IIB + H_2 T4 Gb (Type DM-700A and PI -700A)

II 2 G Ex db IIB + H_2 T4 Gb (Type FP-700A, IR-700A and TP-700A)

EN 60079-0:2012 + A11:2013 EN 60079-1:2014 EN 60079-11:2012

Electrical Information:

FP-700A, IR-700A, and TP-700A
11.5 - 30VDC
Base: 85 mA @ 24VDC
With HART Bridge: 110mA @ 24VDC (85mA sensor + 25mA HART Bridge)
With RAM: 148mA @ 24VDC (85 mA sensor + 63 mA RAM)
With HART/RAM: 148 mA @ 24VDC (85 mA sensor + 63 mA HART/RAM)

DM-700A
11.5 - 30VDC
Base: 50 mA @ 24VDC
With HART Bridge: 75mA @ 24VDC (50mA sensor + 25mA HART Bridge)
With RAM: 113mA @ 24VDC (50 mA sensor + 63 mA RAM)
With HART/RAM: 113 mA @ 24VDC (50 mA sensor + 63 mA HART/RAM)

PI-700A
11.5 - 30VDC
Base: 65 mA @ 24VDC
With HART Bridge: 90mA @ 24VDC (65mA sensor + 25mA HART Bridge)
With RAM: 128mA @ 24VDC (65 mA sensor + 63 mA RAM)
With HART/RAM: 128 mA @ 24VDC (65 mA sensor + 63 mA HART/RAM)

3. Name plates

3.1 FP-700A

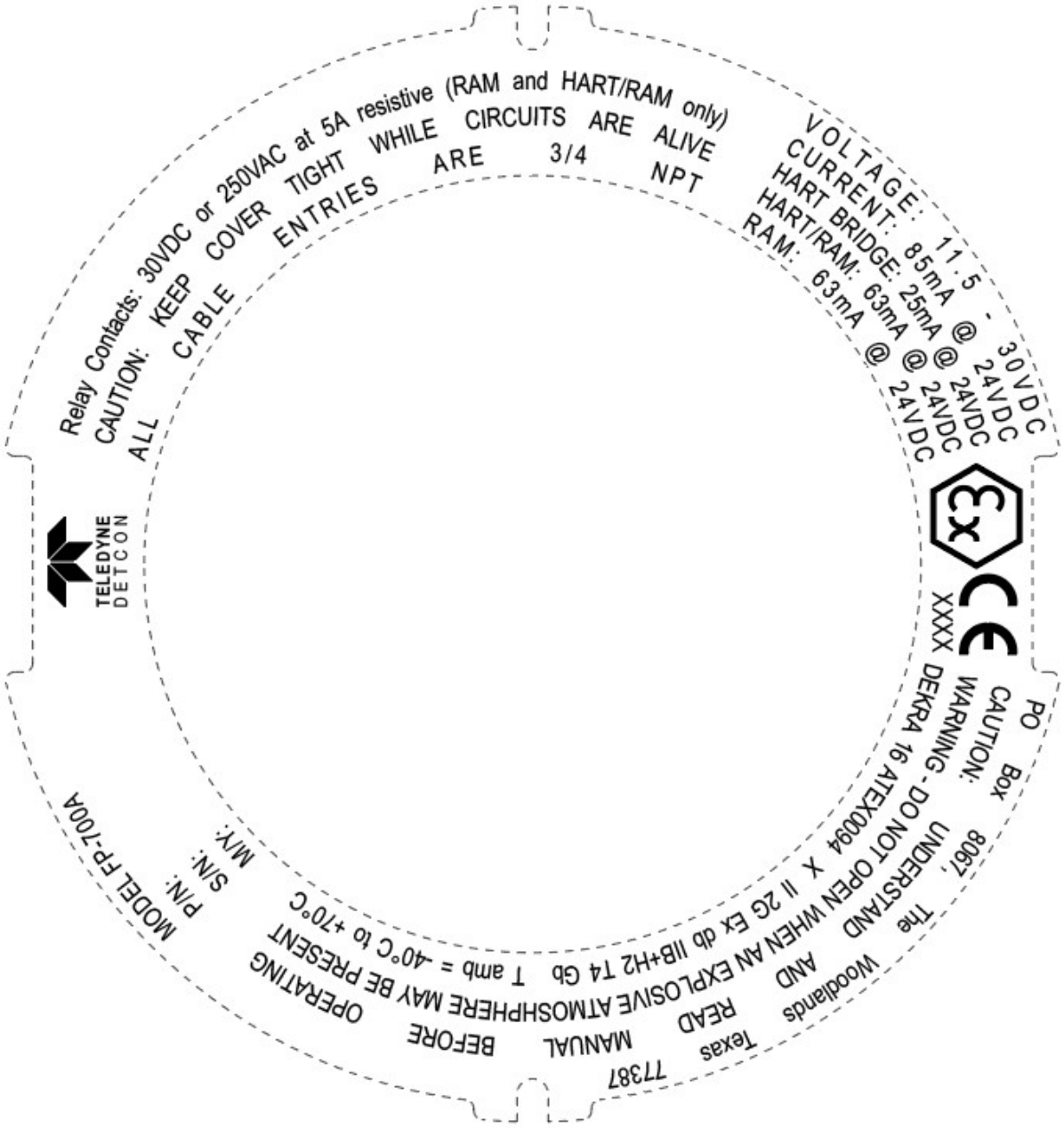

3.2 IR-700A

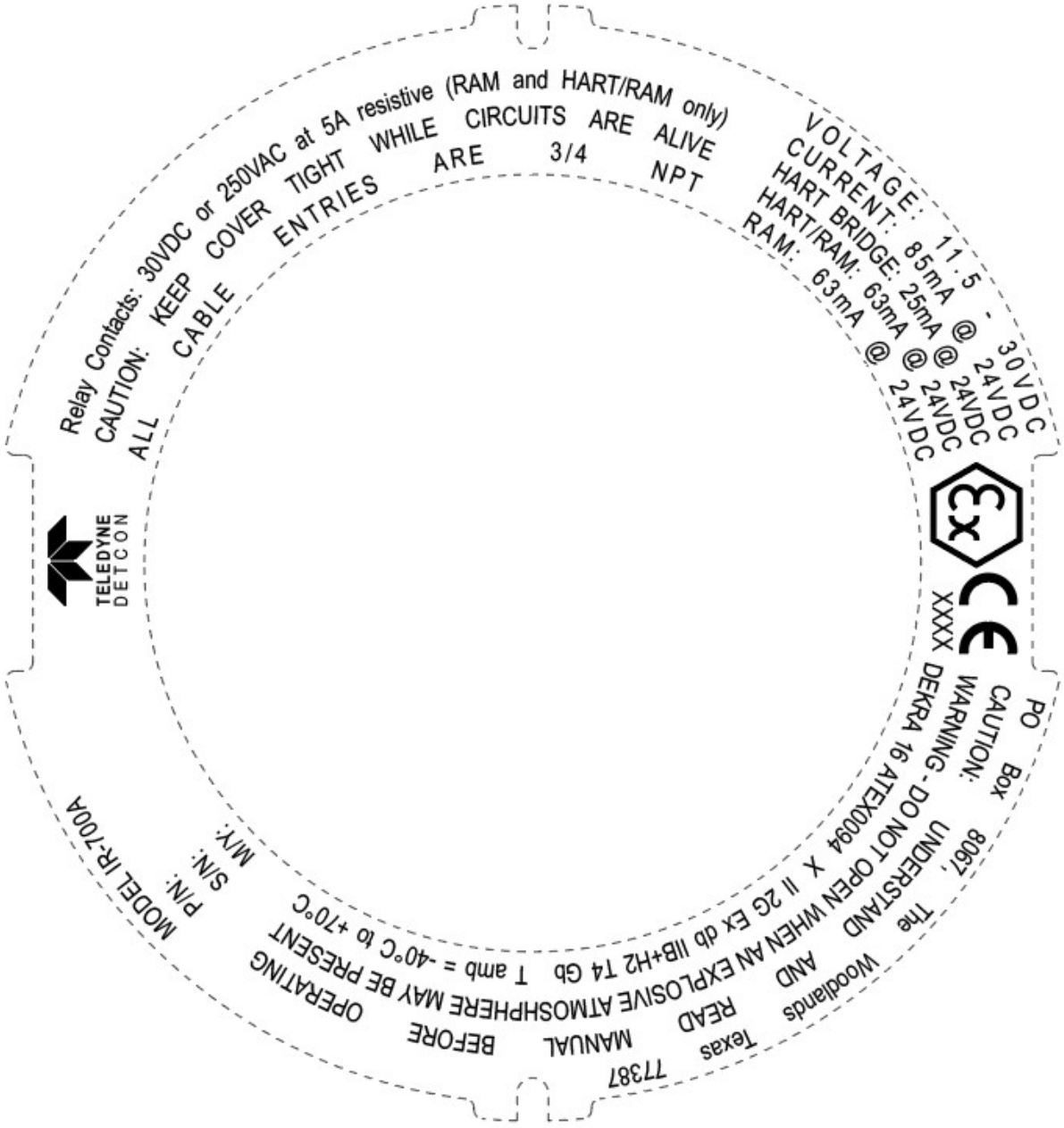
Relay Contacts: 30VDC or 250VAC at 5A resistive (RAM and HART/RAM only)
CAUTION: KEEP COVER TIGHT WHILE CIRCUITS ARE ALIVE
ALL CABLE ENTRIES ARE 3/4 NPT
VOLTAGE: 11.5 - 30VDC
CURRENT: 85mA @ 24VDC
HART BRIDGE: 25mA @ 24VDC
HART/RAM: 63mA @ 24VDC
RAM: 63mA @ 24VDC
TELEDYNE DETCON
XXXX
PO Box 8067, The Woodlands Texas 77387
CAUTION: UNDERSTAND AND READ MANUAL BEFORE OPERATING
WARNING - DO NOT OPEN WHEN AN EXPLOSIVE ATMOSHPHERE MAY BE PRESENT
DEKRA 16 ATEX0094 X II 2G Ex db IIB+H2 T4 Gb T amb = -40°C to +70°C
MODEL IR-700A
P/N:
S/N:
M/Y:

3.3 DM-700A

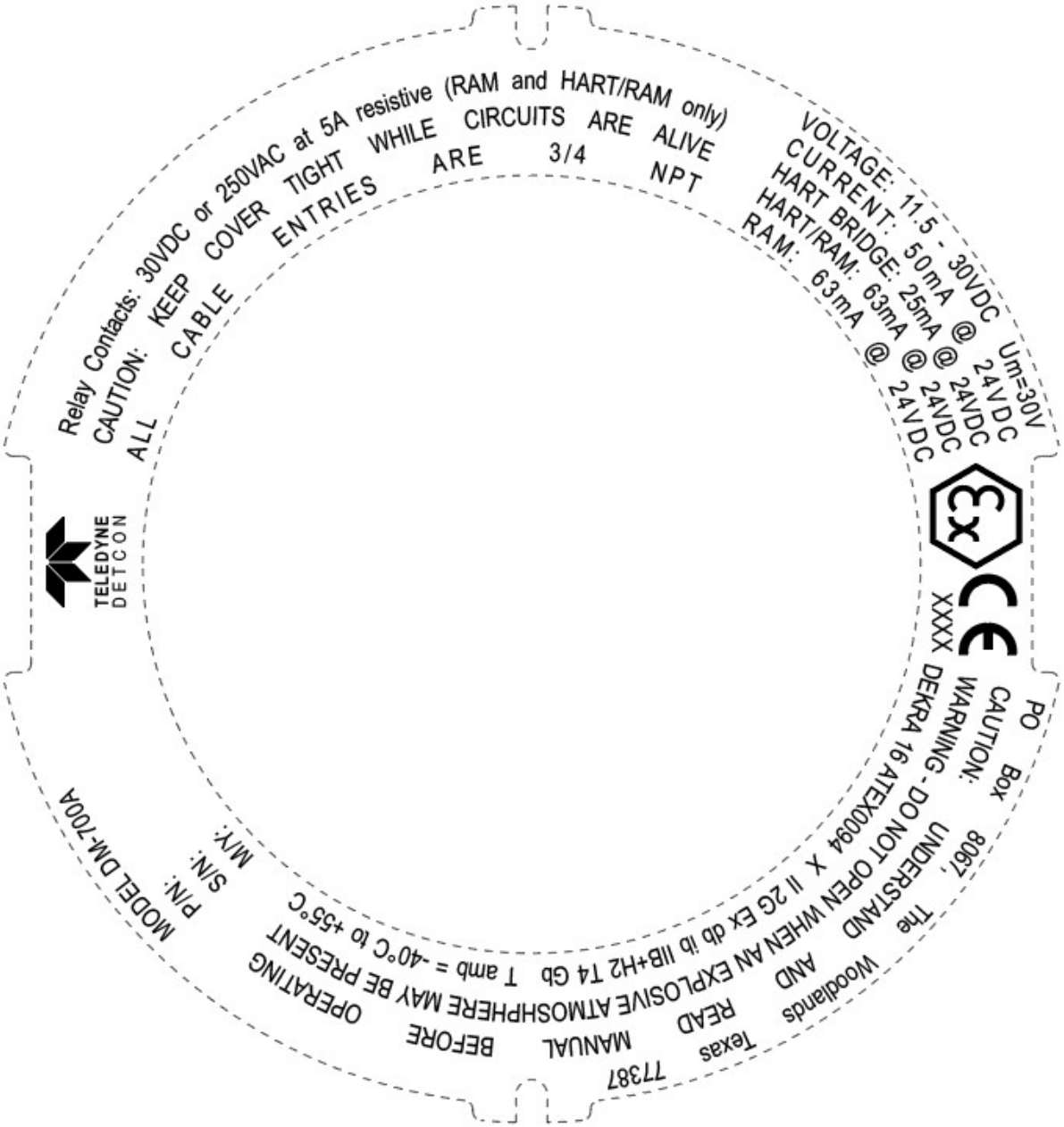
Relay Contacts: 30VDC or 250VAC at 5A resistive (RAM and HART/RAM only)
CAUTION: KEEP COVER TIGHT WHILE CIRCUITS ARE ALIVE
ALL CABLE ENTRIES ARE 3/4 NPT
VOLTAGE: 11.5 - 30VDC Um=30V
CURRENT: 50mA @ 24VDC
HART BRIDGE: 25mA @ 24VDC
HART/RAM: 63mA @ 24VDC
RAM: 63mA @ 24VDC
TELEDYNE DETCON
XXXX
PO Box 8067, The Woodlands Texas 77387
CAUTION: UNDERSTAND AND READ MANUAL BEFORE OPERATING
WARNING - DO NOT OPEN WHEN AN EXPLOSIVE ATMOSHPHERE MAY BE PRESENT
DEKRA 16 ATEX0094 X II 2G Ex db ib IIB+H2 T4 Gb T amb = -40°C to +55°C
MODEL DM-700A
P/N:
S/N:
M/Y:

3.4 TP-700A

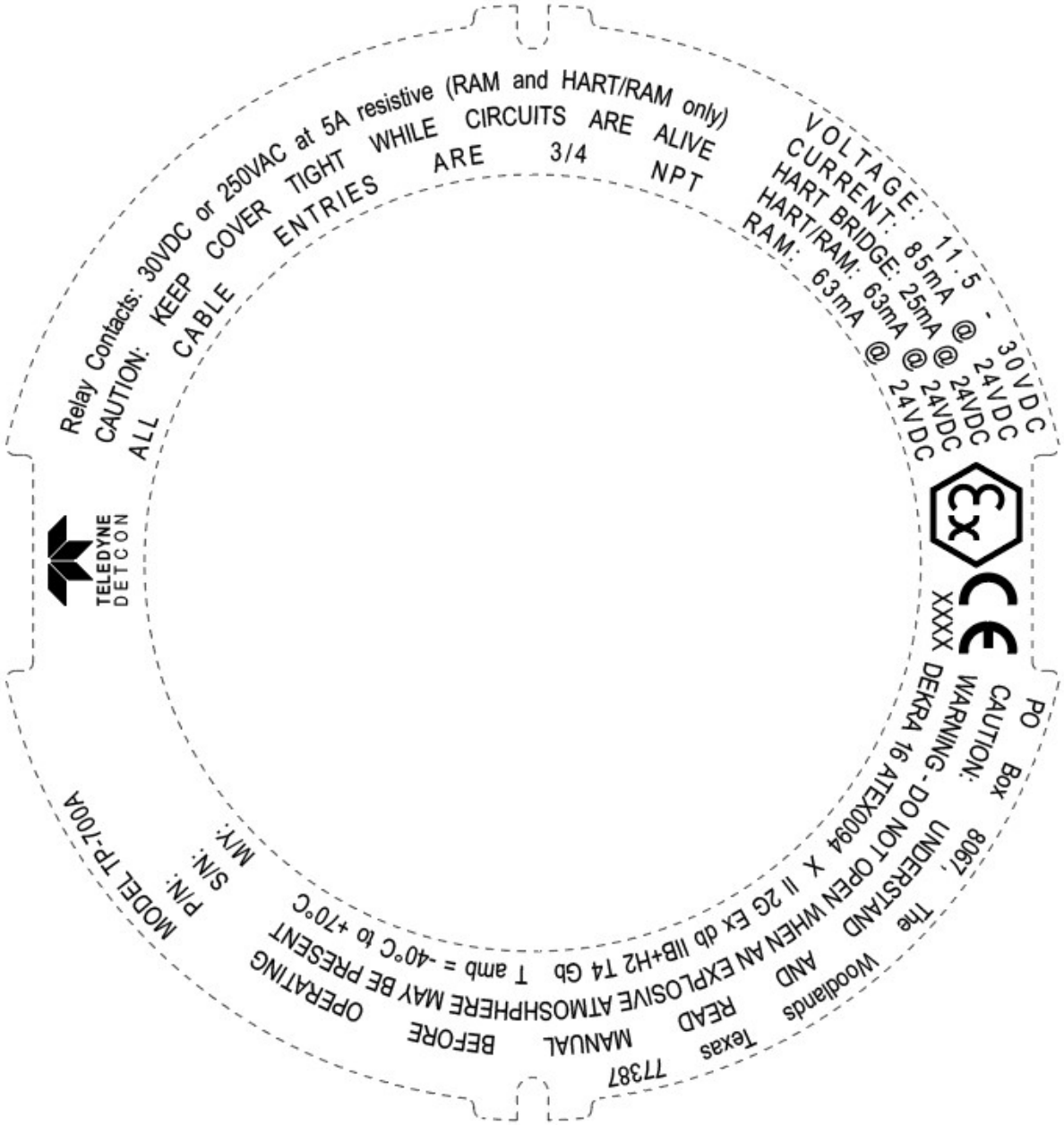
VOLTAGE: 11.5 - 30VDC
CURRENT: 85mA @ 24VDC
HART BRIDGE: 25mA @ 24VDC
HART/RAM: 63mA @ 24VDC
RAM: 63mA @ 24VDC
3/4 NPT
CIRCUITS ARE ALIVE
WHILE
TIGHT
COVER
KEEP
CABLE
ENTRIES
ARE
Relay Contacts: 30VDC or 250VAC at 5A resistive (RAM and HART/RAM only)
CAUTION:
ALL
TELEDYNE DETCON
XXXX
PO Box 8067, The Woodlands AND Texas 77387
CAUTION: UNDERSTAND AND READ MANUAL BEFORE OPERATING
WARNING - DO NOT OPEN WHEN AN EXPLOSIVE ATMOSPHERE MAY BE PRESENT
DEKRA 16 ATEX0094 X II 2G Ex db IIB+H2 T4 Gb T amb = -40°C to +70°C
MODEL TP-700A
P/N:
S/N:
M/Y:

3.5 PI-700A

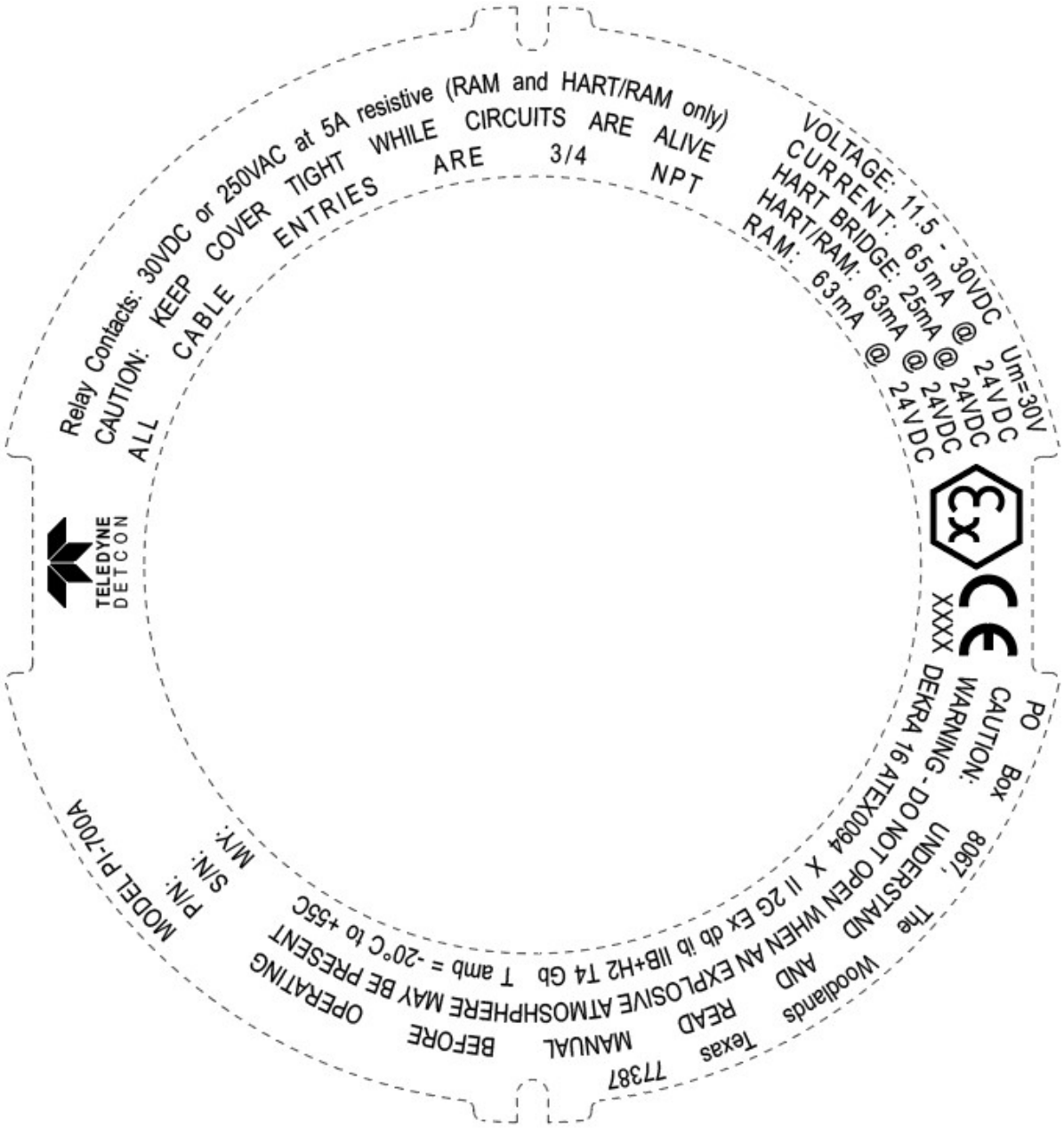
Relay Contacts: 30VDC or 250VAC at 5A resistive (RAM and HART/RAM only)
CAUTION: KEEP COVER TIGHT WHILE CIRCUITS ARE ALIVE
ALL CABLE ENTRIES ARE 3/4 NPT
VOLTAGE: 11.5 - 30VDC
CURRENT: 65mA @ 24VDC
HART BRIDGE: 25mA @ 24VDC
HART/RAM: 63mA @ 24VDC
RAM: 63mA @ 24VDC
Um=30V
XXXX
PO Box 8067, The Woodlands Texas 77387
CAUTION: WARNING - DO NOT OPEN WHEN AN EXPLOSIVE ATMOSPHERE MAY BE PRESENT
DEKRA 16 ATEX0094 X II 2G Ex db ib IIB+H2 T4 Gb T amb = -20°C to +55C
UNDERSTAND AND READ MANUAL BEFORE OPERATING
MODEL PI-700A
P/N:
S/N:
M/Y:
TELEDYNE DETCON

4. Detcon Model FP-700

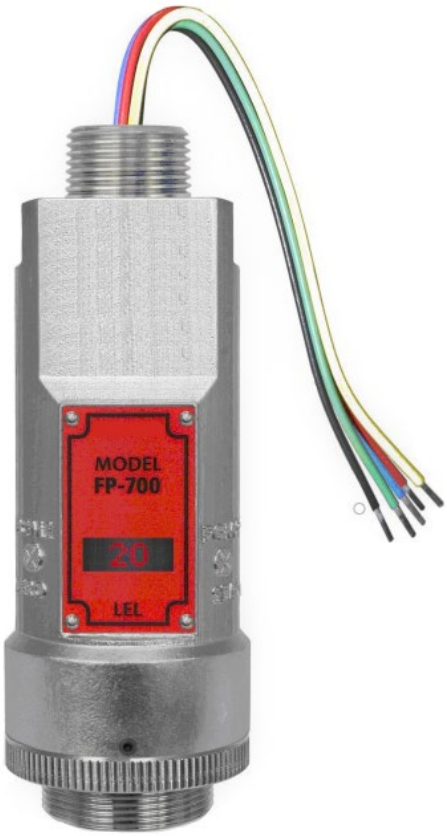

FP-700 Combustible Gas Sensor

0-100% LEL
0-50% LEL

TELEDYNE DETCON, Inc.
4055 Technology Forest Blvd.,
The Woodlands, Texas 77381
Phone 713.559.9200

WWW.TELEDYNEGASANDFLAMEDETECTION.COM

4.1 Introduction

4.1.1 Description

Detcon Model FP-700 combustible gas sensors are non-intrusive “Smart” sensors designed to detect and monitor combustible gases in air. Range of detection is 0-100% LEL or 0-50% LEL. The sensor features an LED display of current reading, fault and calibration status. The unit is equipped with standard analog 4-20mA and Modbus™ RS-485 outputs. A primary feature of the sensor is its method of automatic calibration, which guides the user through each step via fully scripted instructions displayed on the LED display.

The microprocessor-supervised electronics are packaged in an encapsulated module and housed in an explosion proof casting. The unit includes a 4 character alpha/numeric LED used to display sensor readings, and the sensor’s menu driven features when the hand-held programming magnet is used.

Catalytic Bead (Pellistor) Sensor Technology

The sensor technology is a poison-resistant catalytic bead type. Catalytic bead sensors show a strong response to a long list of combustible gases. The sensor is supplied as a matched-pair of detector elements mounted in a plug-in replaceable module. One bead is a catalytically active detector and the other is a non-active reference detector. Each detector consists of a fine platinum wire coil embedded in aluminum oxide. A catalytic mixture is applied to the active detector while the reference detector is treated so that oxidation of the gas does not occur. The technique is referred to as non-selective and may be used to monitor most any combustible gas. Detcon catalytic bead sensors are specifically designed to be resistant to poisons such as sulfides, chlorides, and silicones. The sensors are characteristically stable and capable of providing reliable performance for periods exceeding 5 years in most industrial environments.

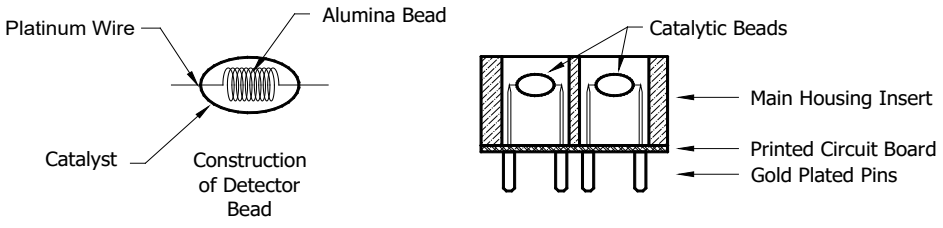

Figure 1 Sensor Cell Construction

Principle of Operation

Method of detection is by diffusion/adsorption. Air and combustible gases pass through a sintered stainless steel filter and contact the heated surface of both the active and reference detectors. The surface of the active detector promotes oxidation of the combustible gas molecules while the reference detector has been treated not to support this oxidation. The reference detector serves as a means to maintain zero stability over a wide range of temperature and humidity.

When combustible gas molecules oxidize on the surface of the active detector, heat is generated, and the resistance of the detector changes. Electronically, the detectors form part of a balanced bridge circuit. As the active detector changes in resistance, the bridge circuit unbalances. This change in output is conditioned by the amplifier circuitry, which is an integral part of the sensor design. The response and clearing characteristics of the sensor are rapid and provide for the continuous and accurate monitoring of ambient air conditions.

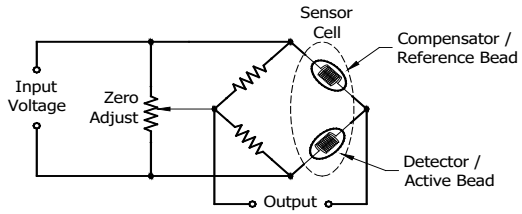

Figure 2 Wheatstone Bridge

Performance Characteristics

The detector elements maintain good sensitivity to combustible gas concentrations in the Lower Explosive Limit (LEL) range, as shown in the response curves in Figure 3. However, for gas concentrations significantly above the LEL range (100% LEL = 5% by volume Methane), the bridge output begins to decrease. Ambiguous readings above the LEL range dictate that alarm control logic be of the latching type, wherein alarms are held in the "ON" position until reset by operations personnel.

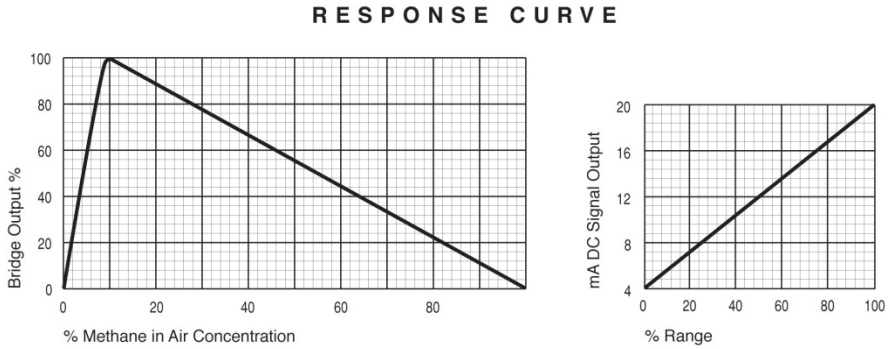

Figure 3 Response Curves

4.1.2 Sensor Electronics Design

Intelligent Sensor Module

The Intelligent Transmitter Module (ITM) is a fully encapsulated microprocessor-based package that accepts a plug-in field replaceable combustible gas sensor. Circuit functions include extensive I/O circuit protection, sensor pre-amplifier, bridge voltage (temperature) control, on-board power supplies, microprocessor, LED display, magnetic programming switches, linear 4-20mA DC output, and Modbus™ RS-485 output. Magnetic program switches located on either side of the LED Display are activated via a hand-held magnetic programming tool, thus allowing non-intrusive operator interface with the ITM. Calibration can be accomplished without declassifying the area. Electrical classifications are Class I, Division 1, Groups B C D, Class I, Zone 1, Group IIB+H_2 and II 2G Ex db IIB+H_2 Gb.

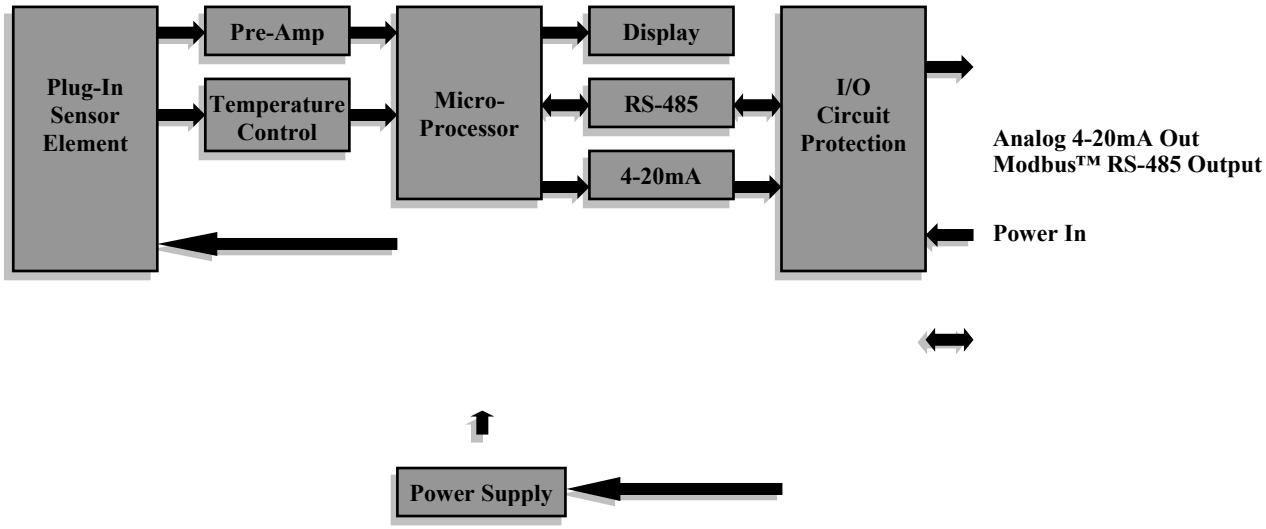

Figure 4 ITM Circuit Functional Block Diagram

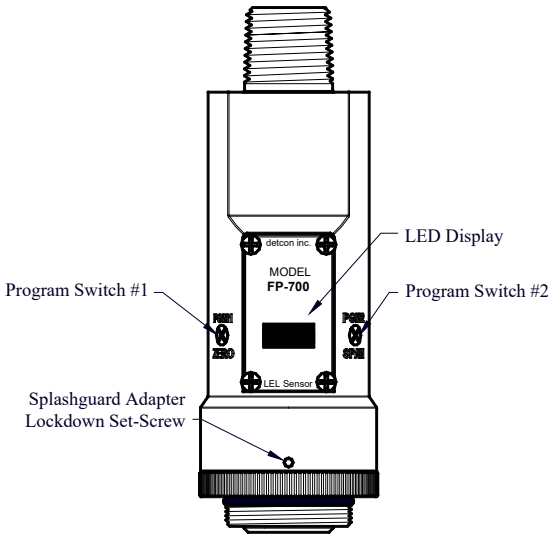

Figure 5 Sensor Assembly Front View

4.1.3 Modular Mechanical Design

The Model FP-700 Sensor Assembly is completely modular and made up of four parts (See Figure 6 for Assembly Break-away):

1) FP-700 Intelligent Transmitter Module (ITM)
2) Field Replaceable Plug-in Combustible Gas Sensor
3) Model 700 Housing Bottom Assembly (contains the Housing Bottom, Flame Arrestor, Retaining Ring, and rubber O-Rings)
4) Splash Guard.

NOTE: All metal components are constructed from electro-polished 316 Stainless Steel in order to maximize corrosion resistance in harsh environments.

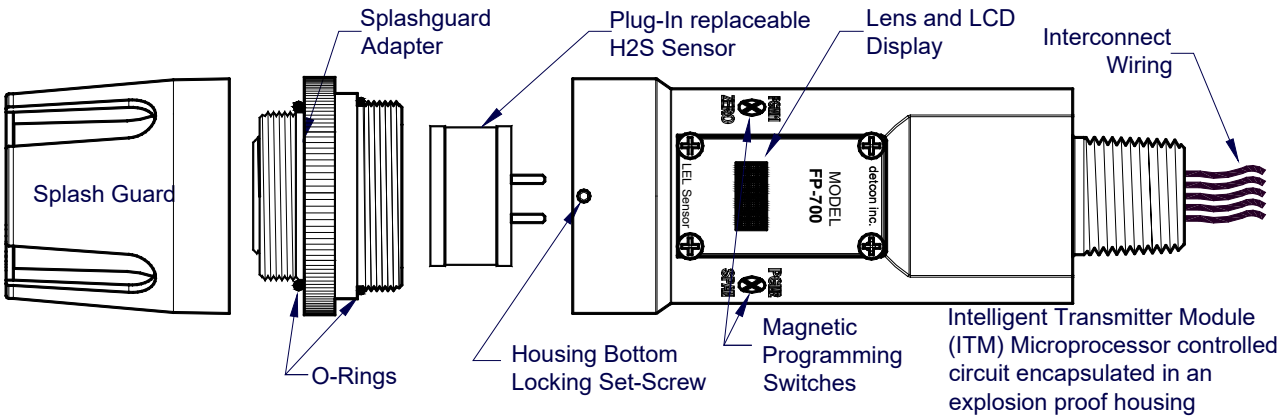

Figure 6 Sensor Assembly Breakaway

4.1.4 Plug-in Replaceable Sensor

The Detcon combustible gas sensor is a poison-resistant and field proven design. It is packaged as true plug-in replaceable type sensor with over-sized gold-plated connections that eliminate corrosion problems. It can be accessed and replaced in the field very easily by releasing the locking screw and unthreading the housing bottom. The Detcon combustible gas sensor has an infinite shelf life, and is supported by a 2-year warranty. The expected service life is 3-5 years.

Figure 7 FP Replaceable Sensor Cell

4.2 Installation

4.2.1 ATEX Operational Guidelines for Safe Use

1. Install sensor only in areas with classifications matching with those described on the ATEX approval label. Follow all warnings listed on the label or in the manual.

2. Ensure that the Housing Bottom and plug-in sensor are installed during operation. The Housing Bottom should be threaded tightly to the Intelligent Transmitter Module. The locking setscrew (M3 x 0.6 6g6h Stainless Steel Allen set screw cup point with yield strength of greater than 40,000 PSI, typical 80,000 PSI) should then be tightened down to keep the Housing Bottom from being inadvertently removed or from becoming loose under vibration. The locking setscrew ensures that Housing Bottom is only removable by authorized personnel with the use of special tools. A M1.5 Allen Wrench is required. If screw requires replacement, only an identical screw may be used.

3. Removal of the Housing Bottom violates the Ex db protection method and hence power must be removed from the sensor prior to its safe removal.

4. The screws holding down the retaining plate label are special fasteners of type Stainless Steel Phillips Pan-head Machine screw, M3 x 0.5, 6g6h having yield strength of greater than 40,000 PSI, typical 80,000 PSI. If screw requires replacement, only an identical screw may be used.

5. Proper precautions should be taken during installation and maintenance to avoid the build-up of static charge on the plastic components of the sensor. This includes the splashguard.

6. Do not operate the sensor outside of the stated operating temperature limits.

7. Do not operate the sensor outside the stated operating limits for voltage supply.

4.2.2 Sensor Placement

Selection of sensor location is critical to the overall safe performance of the product. Six factors play an important role in selection of sensor locations:

(1) Density of the gas to be detected

(2) Most probable leak sources within the industrial process

(3) Ventilation or prevailing wind conditions

(4) Personnel exposure.

(5) Maintenance access.

(6) Personal Exposure.

Density

Placement of sensors relative to the density of the target gas is such that sensors for the detection of heavier than air gases should be located within 4 feet of grade as these heavy gases will tend to settle in low lying areas. For gases lighter than air, sensor placement should be 4-8 feet above grade in open areas or in pitched areas of enclosed spaces.

NOTE: Methane and Hydrogen are lighter than air. Most other combustible gases are heavier than air. Compare the molecular weight, density, or specific gravity of the target gas(es) with that of air to determine appropriate placement.

Leak Sources

The most probable leak sources within an industrial process include flanges, valves, and tubing connections of the sealed type where seals may either fail or wear. Other leak sources are best determined by facility engineers with experience in similar processes.

Ventilation

Normal ventilation or prevailing wind conditions can dictate efficient location of gas sensors in a manner where the migration of gas clouds is quickly detected.

Personnel Exposure

The undetected migration of gas clouds should not be allowed to approach concentrated personnel areas such as control rooms, maintenance or warehouse buildings. A more general and applicable thought toward selecting sensor location is combining leak source and perimeter protection in the best possible configuration.

Maintenance Access

Consideration should be given to providing easy access for maintenance personnel. Consideration should also be given to the consequences of close proximity to contaminants that may foul the sensor prematurely.

NOTE: In all installations the gas sensor should point straight down, refer to Figure 9. Improper sensor orientation may result in false readings and permanent sensor damage.

Additional Placement Considerations

The sensor should not be positioned where it may be sprayed or coated with surface contaminating substances. Painting sensor assemblies is prohibited.

Although the sensor is designed to be RFI resistant, it should not be mounted in close proximity to high-powered radio transmitters or similar RFI generating equipment.

When possible in an area void of high wind, accumulating dust, rain or splashing from hose spray, direct steam releases, and continuous vibration. If the sensor cannot be mounted away from these conditions then make sure the Detcon Harsh Environment Splashguard accessory is used.

Do not mount in locations where temperatures will exceed the operating temperature limits of the sensor. Where direct sunlight leads to exceeding the high temperature-operating limit, use a sunshade to help reduce temperature.

4.2.3 Sensor Contaminants and Interference

Detcon combustible gas sensors may be adversely affected by exposure to certain airborne substances. Loss of sensitivity or corrosion may be gradual if such materials are present in sufficient concentrations.

The performance of the detector elements may be temporarily impaired during operation in the presence of substances described as inhibitors. Inhibitors are usually volatile substances containing halogen compounds. Inhibitors include halide compounds such as Cl_2, ClO_2, F_2, HF, HCl, Br_2, vinyl chloride, and methyl chloride. Inhibition is typically a temporary effect and the detectors generally recover after short periods of operation back in clean air.

Some background gases may act as poisoning agents and have a more damaging effect on the sensor. Although the sensor is designed to be poison resistant, it does have physical limits. Poisoning gases deactivate the active detector's catalytic ability and cause a permanent reduction in the span sensitivity. Examples of typical poisons are: silicone oils and greases, siloxanes (HMDS), H_2S, anti-knock petrol additives, and phosphate esters. Activated carbon filters can be used to provide additional protection from poisoning in most cases.

The presence of such inhibitors and poisons in an area does not preclude the use of this sensor technology, although it is likely that the sensor lifetime will be shorter as a result. Use of this sensor in these environments may require more frequent calibration checks to ensure safe system performance.

4.2.4 Mounting Installation

The FP-700 sensor assembly is designed to be threaded into a ¾" Female NPT fitting of a standard cast metal, Explosion-Proof Enclosure or Junction Box. There are two wrench flats on the upper section of the sensor that should be used to thread the sensor into the ¾" female NPT receiving connection. Thread the sensor up until tight (5 turns is typically expected) and until the display is pointed in the direction that sensor will normally be viewed and accessed.

The FP-700 should be vertically oriented so that the sensor points straight downward. The explosion-proof enclosure or junction box would then typically be mounted on a wall or pole. Detcon provides a standard selection of junction boxes available as sensor accessories (See Figure 8 below), but any appropriately rated enclosure with a downward facing ¾" NPT female connection will suffice.

When mounting on a wall, it is recommended to use a 0.25"-0.5" spacer underneath the mounting ears of the Detcon standard J-Box to offset the sensor assembly from the wall and create open access around the sensor assembly. Spacing requirements for other junction boxes may vary.

When mounting on a pole, secure the Junction Box to a suitable mounting plate and attach the mounting plate to the pole using U-Bolts. (Pole-Mounting brackets for Detcon J-box accessories are available separately.)

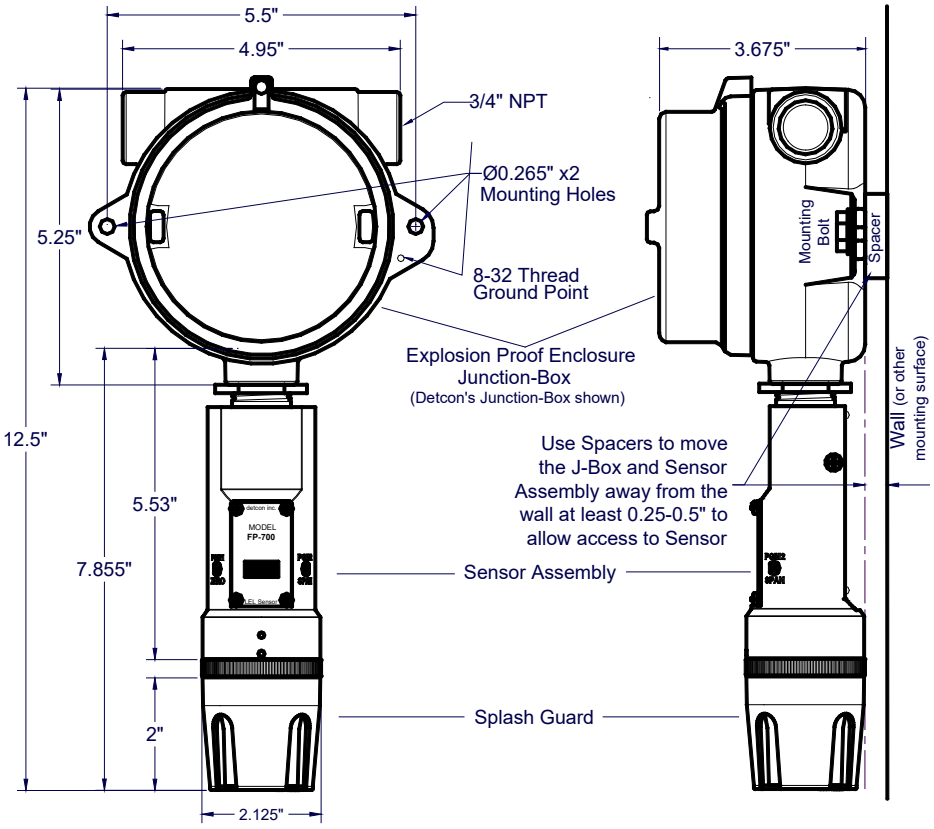

Figure 8 Outline and Mounting Dimensions

4.2.5 Electrical Installation

The Sensor Assembly should be installed in accordance with local electrical codes. The sensor assemblies are CSA/NRTL approved (US and Canada) for Class I, Division 1, Groups B, C, & D area classifications, and are ATEX Approved for II 2G Ex db IIB+H_2 Gb area classifications.

Proper electrical installation of the gas sensor is critical for conformance to Electrical Codes and to avoid damage due to water leakage. Refer to Figure 9 and Figure 10 for proper electrical installation.

NOTE: If a conduit run exits the secondary port, repeat the installation technique shown in Figure 9.

In Figure 9, the drain allows H_2O condensation inside the conduit run to safely drain away from the sensor assembly. The electrical seal fitting is required to meet the National Electrical Code per NEC Article 500-3d (or Canadian Electrical Code Handbook Part 1 Section 18-154). Requirements for locations of electrical seals are covered under NEC Article 501-5. Electrical seals also act as a secondary seal to prevent water from entering the wiring terminal enclosure. However, they are not designed to provide an absolute water-tight seal, especially when used in the vertical orientation.

NOTE: The Detcon Warranty does not cover water damage resulting from water leaking into the enclosure. However, since the electronics are 100% epoxy encapsulated, only the wire terminations could get wet. Moisture could cause abnormal operation and possibly corrosion to the terminal connections, but permanent damage to the sensor would not be expected.

NOTE: A conduit seal is required to be located within 18" of the Stainless Steel J-Box and Sensor Assembly or at the entry of the Aluminum J-Box and Sensor Assembly for North American installations. Crouse Hinds type EYS2, EYD2 or equivalent are suitable for this purpose.

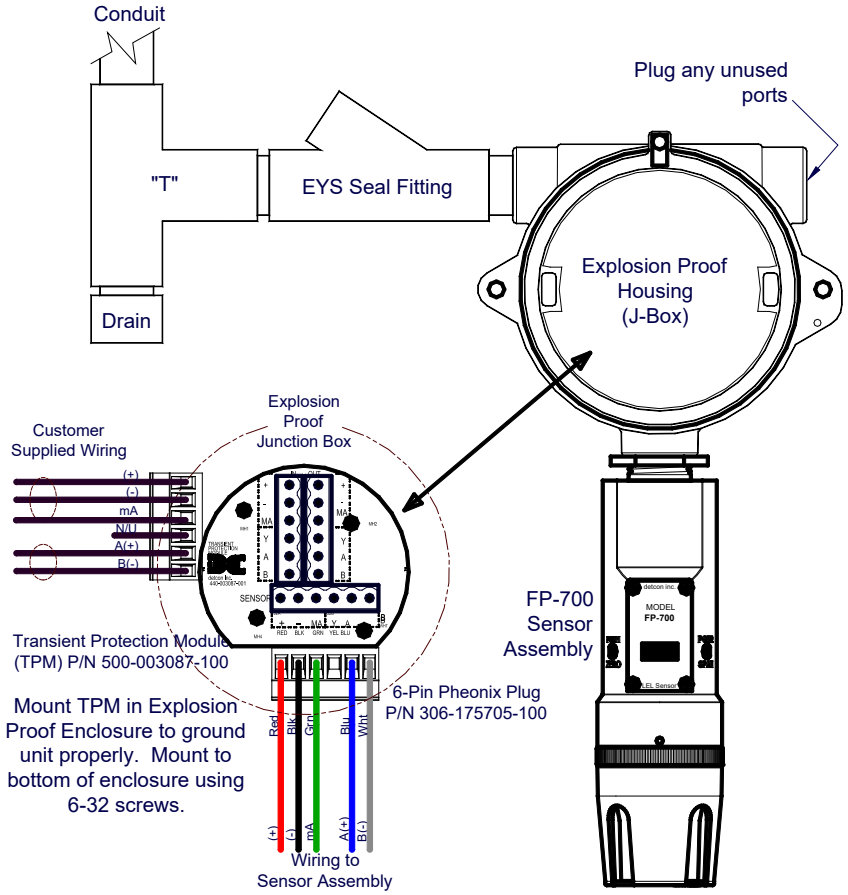

Figure 9 Typical Installation

NOTE: Any unused ports shall be blocked with suitable ¾" male NPT plugs. Detcon supplies one ¾" NPT male plug with their accessory J-box enclosures (Detcon P/N 8522-750). If connections are other than ¾" NPT, use an appropriate male plug of like construction material.

NOTE: All devices connecting to the ¾" NPT conduit entries should be tightened to a minimum of 16 foot-pounds torque.

NOTE: The flamepath joints are not intended to be repaired if damaged.

NOTE: For ATEX use, cable glands, adapters, and/or blanking elements shall be ATEX certified to Ex d IIC and shall be installed.

WARNING: Cables and cable glands must be rated for ≥90°C.

NOTE: Connect earth wire to crimped terminal (≥4mm^2) (Internal and external ground points).

4.2.6 Field Wiring

Detcon Model FP-700 sensor assemblies require three conductor connections between power supplies and host electronic controller's 4-20mA output, and two conductor connections for the Modbus™ RS-485 serial interface. Wiring designations are + (DC), – (DC), mA (sensor signal), and Modbus™ RS-485 A (+), and B (-). Maximum wire ohmic resistance between sensor and 24VDC source is defined below. Maximum wire size for termination in the Detcon J-Box accessory is 14 gauge.

Max Resistance drop on red and black wire is 10 ohms. This considers wire diameter, wire length and maximum operation temperature.

Max loop load resistance between green and black wire is 500 ohms. Minimum loop load resistance between green and black wire is 100 ohms. This is considering wire diameter, wire length, max operating temperature and selected termination resistor.

AWG	Wire Dia.	Over-Current Protection
22	0.723mm	3A
20	0.812mm	5A
18	1.024mm	7A
16	1.291mm	10A
14	1.628mm	20A

Table 1 Protection vs. Wire Gauge

NOTE 1: Wiring table is based on stranded tinned copper wire and is designed to serve as a reference only.

NOTE 2: Shielded cable is required for installations where cable trays or conduit runs include high voltage lines or other possible sources of induced interference. Separate conduit runs are highly recommended in these cases.

NOTE 3: The supply of power should be from an isolated source with over-current protection as stipulated in table.

Terminal Connections

CAUTION: Do not apply System power to the sensor until all wiring is properly terminated. Refer to Section 4.2.7.

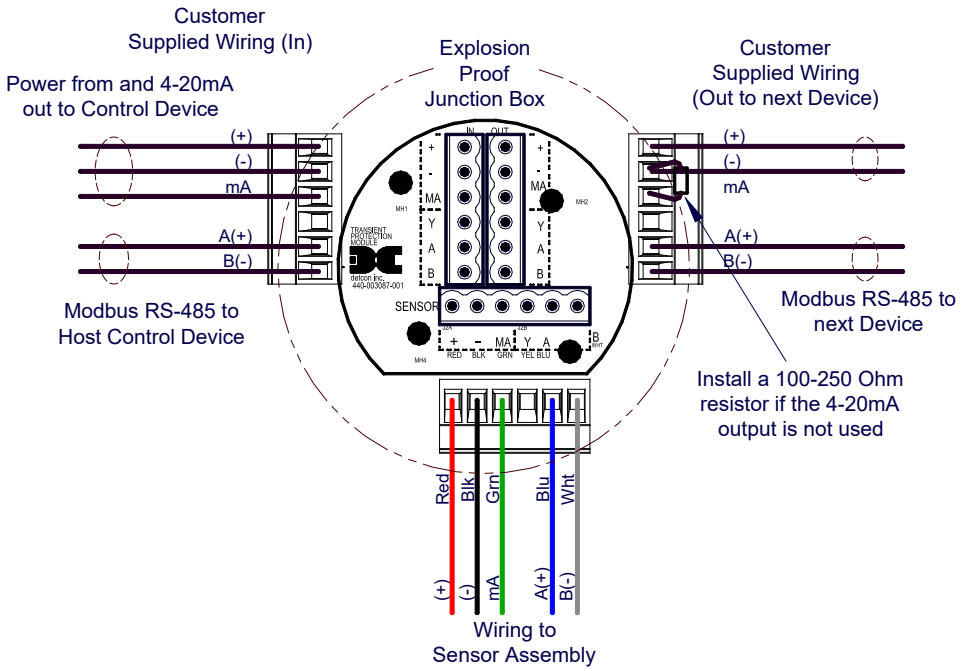

Figure 10 Sensor Wire Connections

a) Remove the junction box cover. Identify the terminal blocks for customer wire connections.

b) Observing correct polarity, terminate the 3-conductor 4-20mA field wiring (+, -, mA) to the sensor assembly wiring in accordance with the detail shown in Figure 10. If the 4-20mA output is not used, the green wire from the sensor must be connected to the (-) terminal on the Transient Protection Module.

NOTE: If the 4-20mA output is not being used, the Green wire from the sensor *must* be connected to the Black wire at the (-) terminal on the Transient Protection Module to ensure RS-485 communication is not disrupted by a 4-20mA Fault.

c) If applicable, terminate the RS-485 serial wiring as shown in Figure 10. Use the second plug (Out) as termination point on the customer side to facilitate a continuous RS-485 serial loop

The RS-485 (if applicable) requires 24 gauge, two conductor, shielded, twisted pair cable between sensor and host PC. General Cable Commodore part number ZO16P0022189 is recommended.

NOTE: Install a 120Ω resistor across A & B terminals on the last sensor in the serial loop.

d) Trim all exposed wire leads if they are not permanently landed in the terminal block.

e) Replace the junction box cover.

4.2.7 Initial Start Up

Upon completion of all mechanical mounting and termination of all field wiring, apply system power in the range of 11.5-30VDC (24VDC typical) and observe the following normal conditions:

a) FP-700 display reads “0”, and no fault messages are flashing.

b) A temporary upscale reading may occur as the sensor heats up. This upscale reading will decrease to 0ppm within 1-2 minutes of power-up, assuming there is no combustible gas in the area of the sensor.

NOTE: The 4-20mA signal is held constant at 4mA for the first two minutes after power up.

Initial Operational Tests

After a warm up period of 1 hour, the sensor should be checked to verify sensitivity to combustible gas.

Material Requirements

- Detcon PN 613-120000-700 700 Series Splash Guard with integral Cal Port -OR-
- Detcon PN 943-000006-132 Threaded Calibration Adapter
- Detcon PN 942-520124-050 Span Gas; 50% LEL methane/balance Air at fixed flow rate of 200-500cc/min (use with 0-100% LEL range).
- Detcon PN 942-520124-025 Span Gas; 25% LEL methane/balance Air at fixed flow rate of 200-500cc/min (use with 0-50% LEL range).

NOTE: Do not use calibration gases in Nitrogen background gas mixtures. This will cause significant reading inaccuracies.

a) Attach the calibration adapter to the threaded sensor housing. Apply the test gas at a controlled flow rate of 200 - 500cc/min (200cc/min is the recommended flow). Allow 1-2 minutes for the reading to stabilize. Observe that during the 1-2 minutes the ITM display increases to a level near that of the applied calibration gas value.

b) Remove test gas and observe that the ITM display decreases to “0”.

Initial operational tests are complete. Detcon FP-700 combustible gas sensors are factory calibrated prior to shipment and should not require significant adjustment on start up. However, it is recommended that a complete calibration test and adjustment be performed 16 to 24 hours after power-up. Refer to zero and span calibration instructions in Section 4.3.

4.3 Operation

4.3.1 Programming Magnet Operating Instructions

The Operator Interface of the Model 700 Series gas sensors is accomplished via two internal magnetic switches located to either side of the LED display (see Figure 12). The two switches, labelled "PGM1" and "PGM2", allow for complete calibration and configuration and thereby eliminate the need for area de-classification or the use of hot permits.

Figure 11 Magnetic Programming Tool

The magnetic programming tool (Figure 11) is used to operate the magnetic switches. Switch action is defined as momentary contact, 3-second hold, and 10-second hold. (Hold times are defined as the time from the point when the arrow prompt "➔ "appears.) For momentary contact use, the programming magnet is briefly held over a switch location. For 3-second hold, the programming magnet is held in place over the switch location for three seconds. For 10-second hold, the programming magnet is held in place over the switch location for 10 seconds. The 3 and 10 second holds are generally used to enter calibration/program menus and save new data. The momentary contact is generally used to move between menu items and to modify set-point values. Arrows ("➔" and "➔") are used on the LED display to indicate when the magnetic switches are activated. The location of "PGM1" and "PGM2" are shown in Figure 12.

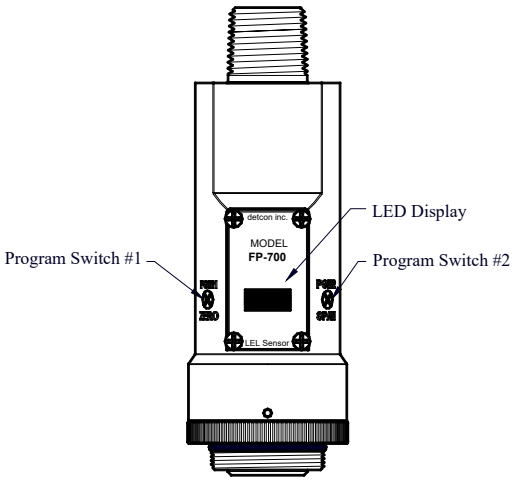

Figure 12 Magnetic Programming Switches

NOTE: While in the Program Mode, if there is no magnetic switch interaction after 4 consecutive menu scrolls, the sensor will automatically revert to normal operating condition. While changing values inside menu items, **if there is no magnet activity after 3-4 seconds the sensor will revert to the menu scroll.**
(Exception to this is with "Signal Output Check" mode.)

4.3.2 Operator Interface

The operating interface is menu-driven via the two magnetic program switches located under the target marks of the sensor housing. The two switches are referred to as “PGM1” and “PGM2”. The menu list consists of three major items that include sub-menus as indicated below. (Refer to the complete Software Flow Chart.)

Normal Operation

- Current Reading and Fault Status

Calibration Mode

- AutoZero
- AutoSpan

Program Mode

- View Sensor Status
  - Sensor Model Type
  - Current Software Version
  - Range of Detection
  - Serial ID address
  - AutoSpan Level
  - Days From Last AutoSpan
  - Remaining Sensor Life
  - Sensor Bridge Current
  - Sensor Bridge Voltage
  - Gas Factor
  - Cal Factor
  - 4-20mA Output
  - Input Voltage Supply
  - Operating Temperature
- Set AutoSpan Level
- Set Gas Factor
- Set Cal Factor
- Set Serial ID
- Set Bridge Voltage
- Signal Output Check
- Restore Default Settings

Software Flowchart

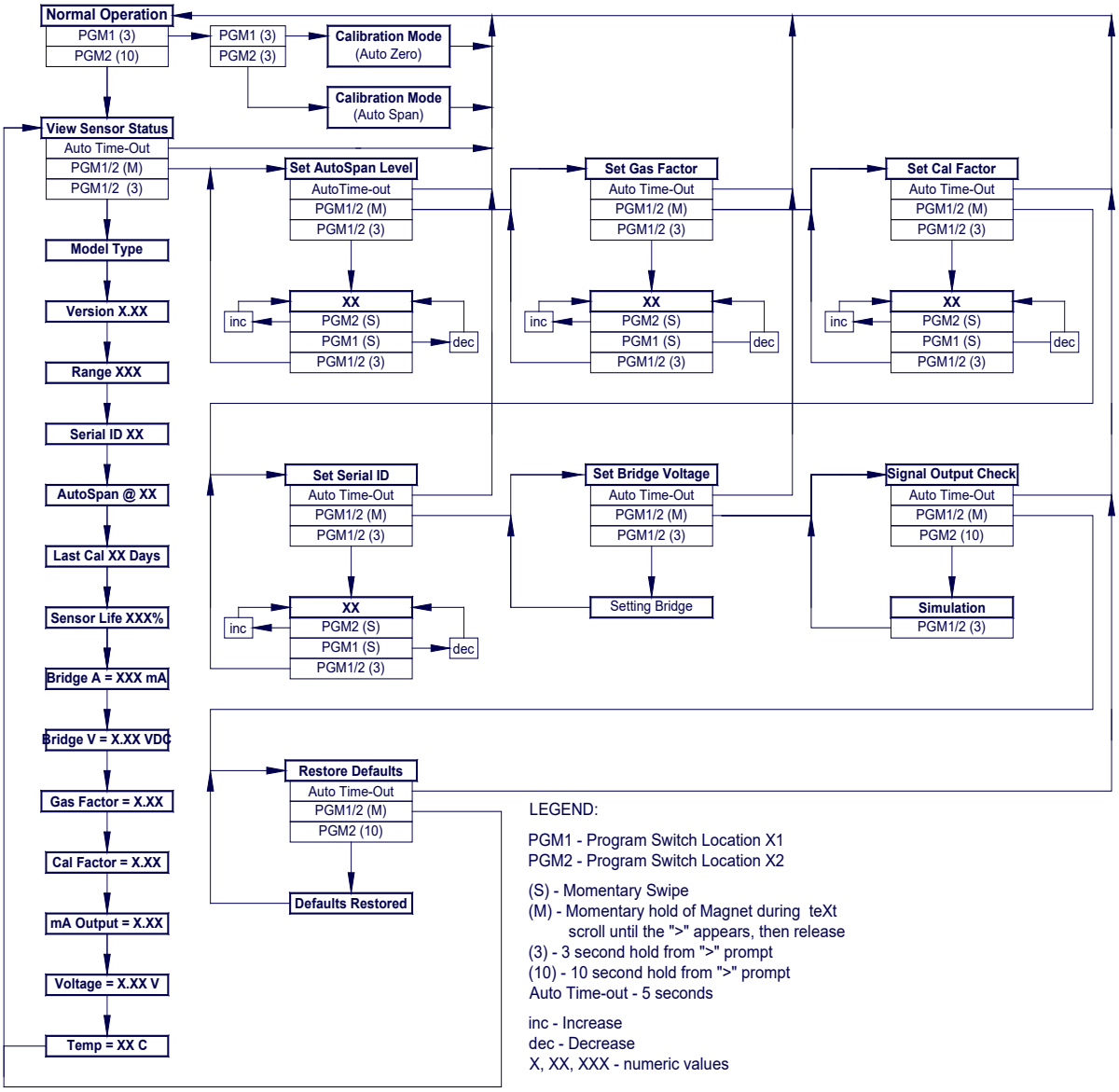

Figure 13 FP-700 Software Flowchart

4.3.3 Normal Operation

In normal operation, the ITM Display continuously shows the current sensor reading, which will normally appear as "0". Once every 60 seconds the LED display will flash the sensor's measurement units and gas type (i.e. % LEL). If the sensor is actively experiencing any diagnostic faults, a "Fault Detected" message will flash on the ITM display every 60 seconds. At any time, while the unit is in "Fault Detected" mode, PGM1 or PGM2 can be swiped to prompt the sensor to display the list of the active faults.

In normal operation, the 4-20mA current output corresponds with the present gas concentration and full-scale range. The RS-485 Modbus™ serial output provides the current gas reading and fault status on a continuous basis when polled.

Caution: Off-scale readings may indicate a flammable concentration

4.3.4 Calibration Mode (AutoZero and AutoSpan)

4.3.4.1 AutoZero

The AutoZero function is used to zero the sensor. Local ambient air can be used to zero calibrate the sensor as long as it can be confirmed that it contains no combustible gases. If this cannot be confirmed then a zero air cylinder should be used.

Material Requirements:

- Detcon PN 327-000000-000 MicroSafe™ Programming Magnet
- Detcon PN 613-120000-700 700 Series Splash Guard with integral Cal Port and Calibration Wind Guard (P/N 943-000000-000) -OR-
- Detcon PN 943-000006-132 Threaded Calibration Adapter
- Detcon PN 942-001123-000 Zero Air cal gas or use ambient air if no combustible gas is present.

NOTE 1: The zero gas source should have a normal background concentration of 20.9% O2. Pure Nitrogen gas standards should not be used or errors may result.

NOTE 2: The Calibration Wind Guard must be used when the Splashguard Adapter with integral Cal Port is used. Failure to use the Calibration Wind Guard may result in an inaccurate AutoZero calibration.

a) If the ambient air has is known to contain no combustible gas content, then it can be used to zero calibrate. If a zero gas cal cylinder is going to be used then attach the calibration adapter and set flow rate of 200-500cc/min and let sensor purge for 1-2 minutes before executing the AutoZero.

b) From Normal Operation, enter Calibration Mode by holding the programming magnet over PGM1 for 3-4 seconds. Note, the "◄" prompt will show that the magnetic switch is activated during the 3 second hold period. The display will then scroll "PGM1=Zero …PGM2=Span". Hold the programming magnet over PGM1 for 3-4 seconds once the "◄" prompt appears to execute AutoZero (or allow to timeout in 10 seconds if AutoZero is not desired).

NOTE: Upon entering Calibration Mode, the 4-20mA signal drops to 2mA and is held at this level until the program returns to normal operation. Modbus™ Status Register bit 14 is also set to signify when the sensor is in-calibration mode.

c) The ITM will display the following sequence of text messages as it proceeds through the AutoZero sequence:

Zero Cal. . .Setting Zero. . . Zero Saved (each will scroll twice)

d) Remove the zero gas and calibration adapter, if applicable.

4.3.4.2 AutoSpan

The AutoSpan function is used to span calibrate the sensor. Span adjustment is recommended at 50% LEL.

NOTE: Before performing AutoSpan Calibration, verify that the AutoSpan level matches the span calibration gas concentration as described in Section 4.3.5.3.

Material Requirements:

- Detcon PN 327-000000-000 MicroSafe™ Programming Magnet
- Detcon PN 613-120000-700 700 Series Splash Guard with integral Cal Port and Calibration Wind Guard (P/N 943-000000-000) -OR-
- Detcon PN 943-000006-132 Threaded Calibration Adapter
- Detcon PN 942-520124-050 50% LEL Methane in balance air (recommended for 0-100% LEL range) or Detcon PN 942-520124-025 25% LEL Methane in balance air (recommended for 0-50% LEL range) or other suitable span gas containing a certified level of % LEL concentration of combustible gas in air balance. A flow fixed rate of 200-500cc/min is recommended.

NOTE 1: The span gas source must have a normal background concentration of 20.9% O2. Pure Nitrogen background mixtures are not acceptable! Significant span calibration inaccuracies will result.

NOTE 2: If the span gas is different from the measured target gas, use the appropriate Cal Factor as described in Section 4.3.5.5.

NOTE 3: If the target gas is other than methane, use the appropriate Gas Factor as described in Section 4.3.5.4.

NOTE 4: The Calibration Wind Guard must be used when the Splashguard Adapter with integral Cal Port is used. Failure to use the Calibration Wind Guard may result in an inaccurate AutoSpan calibration.

CAUTION: Verification that the calibration gas level setting matches the calibration span gas concentration is required before executing “AutoSpan” calibration. These two numbers must be equal.

AutoSpan consists of entering Calibration Mode and following the menu-displayed instructions. The display will ask for the application of span gas in a specific concentration. This concentration must be equal to the calibration gas level setting. The factory default setting and recommendation for span gas concentration is 50% of the sensor's range. If a span gas containing the recommended concentration is not available, other concentrations may be used as long as they fall between 5% and 95% LEL (0-100% LEL range) or 2% and 50% LEL (0-50% LEL range). However, any alternate span gas concentration value must be programmed via the "Set AutoSpan Level" menu before proceeding with AutoSpan calibration. Follow the instructions "a" through "e" below for AutoSpan calibration.

a) Verify that the AutoSpan Level is equal to the calibration span gas concentration. (Refer to View Sensor Status in Section 4.3.5.2.) If the AutoSpan Level is not equal to the calibration span gas concentration, adjust the AutoSpan Level as instructed in Section 4.3.5.3.

b) From Normal Operation, enter Calibration Mode by holding the programming magnet over PGM1 for 3-4 seconds. Note, the "◄" prompt will show that the magnetic switch is activated during the 3-4 second hold period. The display will then scroll "PGM1=Zero…PGM2=Span". Hold the programming magnet over PGM2 for 3-4 seconds once the "►" prompt appears, until the Display starts to scroll "Span Cal" to execute AutoSpan (or allow to timeout in 5 seconds if AutoSpan is not desired). The ITM will then scroll "Apply XX % LEL" (where XX is the AutoSpan Level).

NOTE: Upon entering Calibration Mode, the 4-20mA signal drops to 2mA and is held at this level until the program returns to normal operation. Modbus™ Status Register bit 14 is also set to signify when the sensor is in-calibration mode.

c) Apply the span calibration test gas at a flow rate of 200-500cc/min (200cc/min is the recommended flow rate). As the sensor signal begins to increase, the display will switch to reporting a flashing "XX" reading as the ITM shows the sensor's "as found" response to the span gas presented. If it fails to meet the minimum in-range signal change criteria within 2½ minutes, the display will report "Range Fault" twice and the ITM will return to normal operation, aborting the AutoSpan sequence. The ITM will continue to report a "Range Fault" and will not clear the fault until a successful AutoSpan is completed.

After about 1 minute the reading will auto-adjust to the programmed AutoSpan level. For about another 30 seconds the AutoSpan sequence checks the sensor for acceptable reading stability. If the sensor fails the stability check, the reading is re-adjusted back to the AutoSpan level and the cycle repeats until the stability check is passed. Up to three additional 30-second stability check periods are allowed before the unit reports a "Stability Fault" twice and the ITM will return to normal operation, aborting the AutoSpan sequence. The ITM will continue to report a "Stability Fault" and will not clear the fault until a successful AutoSpan is completed.

If the sensor passes the stability check, the ITM reports a series of messages:

"**AutoSpan Complete**"
"**Sensor Life XXX%**"
"**Remove Span Gas**"

d) Remove the span gas and calibration adapter. The ITM will report a live reading as it clears toward "0". When the reading clears below the threshold of 5% LEL (100% LEL range) or 2% LEL (50% LEL range), the ITM will display "Span Complete" and will revert to normal operation. If the sensor fails to clear to less than the threshold within 5 minutes, a "Clearing Fault" will be reported twice and the ITM will return to normal operation, aborting the AutoSpan sequence. The ITM will continue to report a "Clearing Fault" and will not clear the fault until a successful AutoSpan is completed.

NOTE 1: If the sensor fails the minimum signal change criteria, a **"Range Fault"** will be declared and a "Fault Detected" message will be displayed alternately with the sensor's current reading. The 4-20mA output will be taken to 0mA and the "Range Fault" fault bit will be set on the Modbus output.

NOTE 2: If the sensor fails the stability criteria, a **"Stability Fault"** will be declared and a "Fault Detected" message will be displayed alternately with the sensor's current reading. The 4-20mA output will be taken to 0mA and the "Stability Fault" fault bit will be set on the Modbus output.

NOTE 3: If the sensor fails the clearing time criteria, a "**Clearing Fault**" will be declared and a **"**Fault Detected" message will be displayed alternately with the sensor's current reading. The 4-20mA output will be taken to 0mA and the "Clearing Fault" fault bit will be set on the Modbus output.

4.3.5 Program Mode

Program Mode provides a View Sensor Status menu to check operational and configuration parameters. Program Mode also provides for adjustment of the AutoSpan Level, Bridge Voltage, Gas Factor, Cal Factor, and Serial ID. Additionally, it includes the Restore Factory Defaults and Signal Output Check diagnostic functions.

The Program Mode menu items appear in the order presented below:

View Sensor Status
Set AutoSpan Level
Set Gas Factor
Set Cal Factor
Set Serial ID
Set Bridge Voltage
Signal Output Check
Restore Default Settings

4.3.5.1 Navigating Program Mode

From Normal Operation, enter Program Mode by holding the magnet over PGM2 for 4 seconds (until the displays starts to scroll "View Sensor Status"). Note, the "➔" prompt will show that the magnetic switch is activated during the 4 second hold period. The ITM will enter Program Mode and the display will display the first menu item "View Sensor Status". To advance to the next menu item, hold the magnet over PGM1 or PGM2 while the current menu item's text is scrolling. At the conclusion of the text scroll the arrow "➔" prompt ("➔" for PGM2 or "➔" for PGM1) will appear, immediately remove the magnet. The ITM will advance to the next menu item. Repeat this process until the desired menu item is displayed. Note, PGM1 moves the menu items from right to left and PGM2 moves the menu items from left to right.

To enter a menu item, hold the magnet over PGM1 or PGM2 while the menu item is scrolling. At the conclusion of the text scroll the "➔"prompt ("➔" for PGM2 or "➔" for PGM1) will appear, continue to hold the magnet over PGM1 or PGM2 for an additional 3-4 seconds to enter the selected menu item. If there is no magnet activity while the menu item text is scrolling (typically 4 repeated text scrolls), the ITM will automatically revert to Normal Operation.

4.3.5.2 View Sensor Status

View Sensor Status displays all current configuration and operational parameters including: sensor type, software version number, detection range, AutoSpan level, days since last AutoSpan, estimated remaining sensor life, heater power, raw resistance, input voltage and sensor ambient temperature.

From the **View Sensor Status** text scroll, hold the magnet over PGM1 or PGM2 until the "➔" prompt appears and continue to hold the magnet in place for an additional 3-4 seconds (until the display starts to scroll "Status Is"). The display will scroll the complete list of sensor status parameters sequentially:

Sensor Model Type

The menu item appears as: "700 FP"

Current Software Version

The menu item appears as: "V X.XXZ"

Range of Detection

The menu item appears as: "Range XXX"

Serial ID address.

The menu item appears as: "Serial ID XX"

AutoSpan Level.

The menu item appears as: "Auto Span Level XX"

Days From Last AutoSpan

The menu items appears as: “Last Cal XX days”

Remaining Sensor Life

The menu item appears as: “Sensor Life 100%”

Sensor Bridge Current

The menu item appears as: “Bridge XXXmA

Sensor Bridge Voltage

The menu item appears as: “Bridge X.XXVDC

Gas Factor

The menu item appears as: “Gas Factor X.X”

Cal Factor

The menu item appears as: “Cal Factor X.X”

4-20mA Output

The menu item appears as: “mA Output X.XXmA”

Input Voltage Supply

The menu item appears as: “Voltage XX.XVDC”

Operating Temperature

The menu item appears as: “Temp= XX C”

When the status list sequence is complete, the ITM will revert to the “View Sensor Status” text scroll. The user can either: 1) review list again by executing another 3-4 second hold, 2) move to another menu item by executing a momentary hold over PGM1 or PGM2, or 3) return to Normal Operation via automatic timeout of about 15 seconds (the display will scroll “View Sensor Status” 4 times and then return to Normal Operation).

4.3.5.3 Set AutoSpan Level

Set AutoSpan Level is used to set the span gas concentration level that is being used to calibrate the sensor. This level is adjustable from 5% to 95% (0-100% LEL range) or 2% to 50% (0-50% LEL range). The current setting can be viewed in View Program Status.

The menu item appears as: "**Set AutoSpan Level**".

From the **Set AutoSpan Level** text scroll, hold the magnet over PGM1 or PGM2 until the "➔" prompt appears and continue to hold the magnet in place for an additional 3-4 seconds (until the display starts to scroll "Set Level"). The display will switch to "XX" (where XX is the current gas level). Swipe the magnet momentarily over PGM2 to increase or PGM1 to decrease the AutoSpan Level until the correct level is displayed. When the correct level is achieved, hold the magnet over PGM1 or PGM2 for 3-4 seconds to accept the new value. The display will scroll "Level Saved", and revert to "Set AutoSpan Level" text scroll. Move to another menu item by executing a momentary hold, or return to Normal Operation via automatic timeout of about 15 seconds (the display will scroll "Set AutoSpan Level" 4 times and then return to Normal Operation).

4.3.5.4 Set Gas Factor

Because of the catalytic bead sensor's almost universal response to combustible gases, the FP-700 sensor can be configured to specifically detect any of the combustible gases listed in Table 2. This gas is referred to as the "target gas". In addition, the sensor can also be configured so that it can be calibrated with any of the listed gases regardless of which target gas is selected. This gas is referred to as the "cal gas". These two features, **Set Gas Factor** and **Set Cal Factor,** allow a significant degree of flexibility in the detection and span calibration process.

NOTE: The default value for gas factor is 1.0. This would be used when methane is the target gas. Values other than 1.0 would be used when the target gas is not methane.

Set Gas Factor is used to make the appropriate signal sensitivity adjustment when the target gas is a gas other than methane. This is necessary because the catalytic bead sensor has different signal strengths for each combustible gas and all reading calculations are made based on a reference to methane. The gas factor value is adjustable from 0.2 to 5.0. It represents the translation between the target gas and methane gas, where methane has a normalized gas factor = 1.0. For example, the gas factor for butane is 1.71, because the signal strength of butane is 1.71 times lower than methane. The current setting can be viewed in View Program Status – Gas Factor.

The following table shows the Gas Factors of most combustible gases that can be measured. Find the target gas and enter the corresponding value as the Gas Factor. For example, if butane were the target gas, the correct gas factor would be 1.71. If there is a mixture of target gases, use a weighted approach to determine the correct Gas Factor. For example, if the target gas was 50% butane and 50% methane, the correct gas factor would be calculated and entered as 0.5(1.71) + 0.5 (1.0) = 1.35.

Table 2 Gas/Cal Factors

Gas	Factor	Gas	Factor	Gas	Factor
Acetaldehyde	1.66	Decane	3.05	Dimethyl Ether	1.60
Acetic Acid	1.84	Diethylamine	2.05	Methylethyl Ether	2.27
Acetic Anhydride	2.17	Dimethylamine	1.73	Methylethyl Ketone	2.42
Acetone	1.93	2,3-Dimethylpentane	2.51	Methyl Formate	1.49
Acetylene	1.76	2,2-Dimethylpropane	2.52	Methyl Mercaptan	1.64
Alkyl Alcohol	1.96	Dimethyl Sulphide	2.30	Methyl propionate	1.95
Ammonia	0.79	1,4-Dioxane	2.24	Methyl n-propyl Ketone	2.46
n-Amyl Alcohol	3.06	Ethane	1.47	Naphtha	3.03
Aniline	2.54	Ethyl Acetate	1.95	Naphthalene	2.94
Benzene	2.45	Ethyl Alcohol	1.37	Nitromethane	1.72
Biphenyl	4.00	Ethylamine	1.90	n-Nonane	3.18
1,3-Butadiene	1.79	Ethyl Benzene	2.80	n-Octane	2.67
Butane	1.71	Ethylcyclopentane	2.52	n-Pentane	2.18
iso-Butane	1.93	Ethylene	1.41	iso-Pentane	2.15
Butene-1	2.20	Ethylene Oxide	1.93	Propane	1.81
cis-Butene-2	2.06	Diethyl Ether	2.16	n-Propyl Alcohol	2.12
trans-Butene-2	1.97	Ethyl Formate	2.26	n-Propylamine	2.07
n-Butyl Alcohol	2.91	Ethyl Mercaptan	1.78	Propylene	1.95
iso-Butyl Alcohol	1.89	n-Heptane	2.59	Propylene Oxide	2.18
tert-Butyl-Alcohol	1.34	n-Hexane	2.71	iso-Propyl Ether	2.29
n-Butyl Benzene	3.18	Hydrazine	2.22	Propyne	2.40
iso-Butyl Benzene	3.12	Hydrogen Cyanide	2.09	Toluene	2.47
n-Butyric Acid	2.63	Hydrogen	1.30	Triethylamine	2.51
Carbon Disulphide	5.65	Hydrogen Sulphide	2.54	Trimethylamine	2.06
Carbon Monoxide	1.32	Methane	1.00	Vinyl Chloride	2.32
Carbon Oxysulphide	1.07	Methyl Acetate	2.01	Vinyl Ethyl Ether	2.38
Cyanogen	1.12	Methyl Alcohol	1.16	o-Xylene	2.79
Cyclohexane	2.43	Methylamine	1.29	m-Xylene	2.55
Cyclopropane	1.60	Methylcyclohexane	2.26	p-Xylene	2.55

The menu item appears as: "**Set Gas Factor**".

From the **Set Gas Factor** text scroll, hold the magnet over PGM1 or PGM2 until the "◀" prompt appears and continue to hold the magnet in place for an additional 3-4 seconds (until the display starts to scroll "Set Factor"). The display will then switch to "X.XX" (where X.XX is the current gas factor). Swipe the magnet momentarily over PGM2 to increase or PGM1 to decrease the gas factor level until the correct value is displayed. Hold the magnet over PGM1 or PGM2 for 3 seconds to accept the new value. The display will scroll "Factor Saved", and revert to "Set Gas Factor" text scroll.

Move to another menu item by executing a momentary hold, or, return to Normal Operation via automatic timeout of about 15 seconds (the display will scroll "Set Gas Factor" 4 times and then return to Normal Operation).

4.3.5.5 Set Cal Factor

Because of the catalytic bead sensor's almost universal response to combustible gases, the FP-700 sensor can be span calibrated with any of the combustible gases listed in Table 2 above. This specific gas is referred to as the "cal gas".

NOTE: The default value for cal factor is 1.0. This would be used when methane is the cal gas. Values other than 1.0 would be used when the span cal gas is not methane.

Set Cal Factor is used to make the appropriate signal sensitivity adjustment when the cal gas is a gas other than methane. This is necessary because the catalytic bead sensor has different signal strengths for each combustible gas and all reading calculations are made based on a reference to methane. The cal factor value is adjustable from 0.2 to 5.0. It represents the translation between the cal gas and methane gas, where methane has a normalized cal factor = 1.0. For example, the cal factor for butane is 1.71 because the signal strength of butane is 1.71 times lower than methane. The current setting can be viewed in View Program Status.

Table 2 shows the Cal Factors of most combustible gases that will be used as span calibration sources. Find the gas of interest and enter that value the Cal Factor. For example, if propane were used as the cal gas, the correct cal factor would be 1.81.

The menu item appears as: "**Set Cal Factor**".

From the **Set Gas Factor** text scroll, hold the magnet over PGM1 or PGM2 until the "◀" prompt appears and continue to hold the magnet in place for an additional 3-4 seconds (until the display starts to scroll "Set Factor"). The display will then switch to " X.XX" (where X.XX is the current cal factor). Swipe the magnet momentarily over PGM2 to increase or PGM1 to decrease the gas factor level until the correct value is displayed. Hold the magnet over PGM1 or PGM2 for 3-4 seconds to accept the new value. The display will scroll "Factor Saved", and revert to "Set Cal Factor" text scroll.

Move to another menu item by executing a momentary hold, or, return to Normal Operation via automatic timeout of about 15 seconds (the display will scroll "Set Cal Factor" 4 times and then return to Normal Operation).

4.3.5.6 Set Serial ID

Detcon Model FP-700 sensors can be polled serially via RS-485 Modbus™ RTU. Refer to Section 4.0 for details on using the Modbus™ output feature.

Set Serial ID is used to set the Modbus™ serial ID address. It is adjustable from 01 to 256 in hexadecimal format (01-FF hex). The current serial ID can be viewed in View Sensor Status using the instruction given in Section 4.3.5.2.

The menu item appears as: "**Set Serial ID**".

From the "**Set Serial ID"** text scroll, hold the programming magnet over PGM1 or PGM2 until the "➔" prompt appears and continue to hold the magnet in place for an additional 3-4 seconds (until the display starts to scroll "Set ID"). The display will then switch to "XX" (where XX is the current ID address). Swipe the magnet momentarily over PGM2 to increase or PGM1 to decrease the hexadecimal number until the desired ID is displayed. Hold the magnet over PGM1 or PGM2 for 3-4 seconds to accept the new value. The display will scroll "ID Saved", and revert to "Set Serial ID" text scroll.

Move to another menu item by executing a momentary hold, or, return to Normal Operation via automatic timeout of about 15 seconds (the display will scroll "Set Serial ID" 5 times and then return to Normal Operation).

4.3.5.7 Set Bridge Voltage

Each Detcon plug-in combustible gas sensor requires a one-time setting for optimal bridge voltage. This is set automatically during the "Set Bridge Voltage" sequence. The "Set Bridge Voltage" sequence determines the required bridge voltage such that every plug-in sensor operates at exactly 200mA current. This technique provides for tremendous uniformity in sensor-to-sensor operational performance, and it is notably better than sensors that are operated on a common fixed bridge voltage platform. The range of bridge voltages required for Detcon sensors is generally between 2.5 – 2.9VDC.

NOTE: The "Set Bridge Voltage" function is executed during factory calibration of every FP-700 sensor. In the field, this menu item is only needed when a replacement plug-in sensor is being installed, or when mating a new FP-700 ITM with an existing plug-in sensor.

The menu item appears as: "**Set Bridge Voltage**".

From the **Set Bridge Voltage** text scroll, hold the magnet over PGM1 or PGM2 until the "➔" prompt appears and continue to hold the magnet in place for an additional 7-8 seconds (until the display starts to scroll "Setting Bridge"). The ITM will then display "WAIT". During the 1-minute sequence, the ITM will display the three-digit number that corresponds to the bridge current as it is being adjusted. At conclusion, display will scroll "Set Bridge Voltage". The new bridge voltage can be viewed in the "View Sensor Status" menu.
Move to another menu item by executing a momentary hold, or, return to Normal Operation via automatic timeout of about 15 seconds (the display will scroll "Set Bridge Voltage" 4 times and then return to Normal Operation).

4.3.5.8 Signal Output Check

Signal Output Check provides a simulated 4-20mA output and RS-485 Modbus™ output. This simulation allows the user to conveniently perform a functional system check of their entire safety system. This signal output simulation also aids the user in performing troubleshooting of signal wiring problems.

The menu item appears as: "**Signal Output Check**".

From the "Signal Output Check" text scroll, hold the magnet over PGM1 or PGM2 until the "➔" prompt appears and then hold continuously for an additional 10 seconds. Once initiated, the display will scroll "Simulation Active" until the function is stopped. During simulation mode, the 4-20mA value will be increased from 4.0mA to 20.0mA (in 1% of range increments at about a 1 second update rate) and then decreased from 20.0mA to 4.0mA. The same simulation sequence is applied to the Modbus™ output gas reading.

NOTE: Signal Output Check stays active indefinitely until the user stops the function. There is no automatic timeout for this feature.

To end simulation mode, hold magnet over PGM1 or PGM2 for 3 seconds. The display will either move to the prior menu item or move to the next menu item respectively.

Move to another menu item by executing a momentary hold, or, return to Normal Operation via automatic timeout of about 15 seconds.

4.3.5.9 Restore Factory Defaults

Restore Factory Defaults is used to clear current user configuration and calibration data from memory and revert to factory default values. This may be required if the settings have been configured improperly and a known reference point needs to be re-established to correct the problem.

This menu item appears as: "**Restore Defaults**".

NOTE: "Restoring Factory Defaults" should only be used when absolutely necessary. All previously existing configurational inputs will have to be re-entered if this function is executed. A full 10-second magnet hold on PGM 2 is required to execute this function.

From the "Restore Defaults" text scroll, hold the programming magnet over PGM2 until the "➔" prompt appears and continue to hold 10 seconds. The display will scroll "Restoring Defaults", and then will revert to the "Restore Defaults" text scroll.

Move to another menu item by executing a momentary hold, or, return to Normal Operation via automatic timeout of about 15 seconds (the display will scroll "Restore Defaults" 4 times and then return to Normal Operation).

Following the execution of "**Restore Defaults**", the TP-700 will revert to its factory default settings. The default settings are:

- Serial ID = 01. The Serial ID must be set appropriately by the operator (Section 4.3.5.6).

NOTE: The following must be performed in order before the sensor can be placed in operation.

- AutoSpan Level = 50 %LEL. AutoSpan level must be set appropriately by the operator (Section 4.3.5.3).
- Gas Factor = 1.0. The Gas Factor must be set appropriately by the operator (Section 4.3.5.4).
- Cal Factor = 1.0. The Cal Factor must be set appropriately by the operator (Section 4.3.5.5).
- AutoZero: AutoZero Settings are lost and user must perform new AutoZero (Section 4.3.4).
- AutoSpan: AutoSpan Settings are lost and user must perform new AutoSpan (Section 4.3.4).

4.3.6 Program Features

Detcon FP-700 gas sensors incorporate a comprehensive set of diagnostic features to achieve Fail-Safe Operation. These Operational features and Failsafe Diagnostic features are detailed below.

4.3.6.1 Operational Features

Over-Range

When gas greater than the full-scale range is detected, the ITM display will continuously flash the full-scale reading. This designates an over-range condition. The 4-20mA signal will report a 22mA output during this time.

In-Calibration Status

When the sensor is engaged in AutoZero or AutoSpan calibration, the 4-20mA output signal is taken to 2.0mA and the in-calibration Modbus™ Status Register bit 14 is set. This alerts the user that the ITM is not in an active measurement mode. This feature also allows the user to log the AutoZero and AutoSpan events via their master control system.

Sensor Life

Sensor Life is calculated after each AutoSpan calibration and is reported as an indicator of remaining service life. It is reported in the "View Sensor Status" menu and as a RS-485 Modbus register bit. Sensor Life is reported on a scale of 0-100%. When Sensor Life falls below 25%, the sensor cell should be replaced within a reasonable maintenance schedule.

Last AutoSpan Date

This reports the number of days that have elapsed since the last successful AutoSpan. This is reported in the View Sensor Status menu.

4.3.6.2 Fault Diagnostic/Failsafe Features

Fail-Safe/Fault Supervision

Model FP-700 sensors are designed for Fail-Safe operation. If any of the diagnostic faults listed below are active, the ITM Display will alternately scroll the message "Fault Detected" during normal operation. At any time while the "Fault Detected" message is scrolling, hold the programming magnet over PGM2 for 1 second to display the active fault(s). All active faults will then be reported sequentially.

Most fault conditions result in failed operation of the sensor and in those cases the 4-20mA signal is dropped to the universal fault level of 0mA. These include the AutoZero and AutoSpan Calibration faults, Bridge Fault, Sensor Fault, Processor Fault, Memory Fault, Loop Fault, and Input Voltage Fault. The 0mA fault level is not employed for a Temperature Fault and AutoSpan Reminder Fault. For all diagnostic faults, the associated RS-485 Modbus™ fault register will be flagged to alert the user digitally.

NOTE: Refer to the Troubleshooting Guide section 4.6 for guidance on fault conditions.

Zero Fault

If the sensor drifts below –10% LEL, the "Zero Fault" will be declared. A "Zero Fault" will cause a "Fault Detected" message to scroll once a minute on the ITM display and drop the 4-20mA output to 0mA. The Modbus™ fault register bit for Zero Fault will be set and will not clear until the fault condition has been cleared. The sensor should be considered "Out-of-Service" until a successful AutoZero calibration is performed.

Range Fault – AutoSpan

If the sensor fails the minimum signal (Section 4.3.4.2) change criteria during AutoSpan sequence, the "Range Fault" will be declared. A "Range Fault" will cause a "Fault Detected" message to scroll once a minute on the ITM display and drop the 4-20mA output to 0mA. The Modbus™ fault register bit for Range Fault will be set and will not clear until the fault condition has been cleared. The sensor should be considered "Out-of-Service" until a successful AutoSpan calibration is performed.

Stability Fault - AutoSpan

If the sensor fails the signal stability criteria (Section 4.3.4.2) during AutoSpan sequence, the "Stability Fault" will be declared. A "Stability Fault" will cause a "Fault Detected" message to scroll once a minute on the ITM display and drop the mA output to 0mA. The Modbus™ fault register bit for Stability Fault will be set and will not clear until the fault condition has been cleared. The sensor should be considered as "Out-of-Service" until a successful AutoSpan calibration is performed.

Clearing Fault - AutoSpan

If the sensor fails the clearing criteria (Section 4.3.4.2) during AutoSpan sequence, the "Clearing Fault" will be declared. A "Clearing Fault" will cause a "Fault Detected" message to scroll once a minute on the ITM display and drop the milliamp output to 0mA. The Modbus™ fault register bit for Clearing Fault will be set and will not clear until the fault condition has been cleared. The sensor should be considered as "Out-of-Service" until a successful AutoSpan calibration is performed.

Sensor Fault

If either the active or reference detector should fail and become electrically open or the sensor was missing, a “Sensor Fault” will be declared. A “Sensor Fault” will cause a “Fault Detected” message to scroll once a minute on the ITM display. The Modbus™ fault register bit for Sensor Fault will be set and will not clear until the fault condition has been cleared. If a Sensor Fault occurs, the 4-20mA signal will be set at 0mA until the fault condition is resolved.

Processor Fault

If the detector has any unrecoverable run-time errors, a “Processor Fault” is declared. A “Processor Fault” will cause a “Fault Detected” message to scroll once a minute on the ITM display. The Modbus™ fault register bit for Processor Fault will be set and will not clear until the fault condition has been cleared. If a Processor Fault occurs, the 4-20mA signal will be set at 0mA until the fault condition is resolved.

Memory Fault

If the detector has a failure in saving new data to memory, a “Memory Fault” is declared. A “Memory Fault” will cause the “Fault Detected” message to scroll once a minute on the ITM display. The Modbus™ fault register bit for Memory Fault will be set and will not clear until the fault condition has been cleared. If a Memory Fault occurs, the 4-20mA signal will be set at 0mA until the fault condition is resolved.

4-20mA Loop Fault

If the sensor detects a condition where the 4-20mA output loop is not functional (high loop resistance or failed circuit function) a “4-20mA Fault” is declared. A “4-20mA Fault” will cause the “Fault Detected” message to scroll once a minute on the ITM display. The Modbus™ fault register bit for Loop Fault will be set and will not clear until the fault condition has been cleared. If a Loop Fault occurs, the 4-20mA signal will be set at 0mA until the fault condition is resolved. If the 4-20mA current loop is still out of tolerance, contact Detcon at Detcon-service@teledyne.com, or contact Detcon customer service.

NOTE: If the 4-20mA output is not being used, the Green wire from the sensor *must* be connected to the Black wire at the (-) terminal on the Transient Protection Module to ensure RS-485 communication is not disrupted by a 4-20mA Fault.

Input Voltage Fault

If the detector is currently receiving an input voltage that is outside of the 11.5-28VDC range, an “Input Voltage Fault” is declared. An “Input Voltage Fault” will cause the “Fault Detected” message to scroll once a minute on the ITM display. The fault register bit for Input Voltage Fault will be set and will not clear until the fault condition has been cleared. If an Input Voltage Fault occurs, the 4-20mA signal will be set at 0mA until the fault condition is resolved.

Temperature Fault

If the detector is currently reporting an ambient temperature that is outside of the –40C to +75C range a “Temperature Fault” is declared. A “Temperature Fault” will cause the “Fault Detected” message to scroll once a minute on the ITM display. The Modbus™ fault register bit for Temperature Fault will be set and will not clear until the fault condition has been cleared. If a Temperature Fault occurs, the 4-20mA signal remains operational.

AutoSpan Reminder Fault

If 180 days has elapsed since the last successful AutoSpan, an AutoSpan Fault will be generated. An “AutoSpan Fault” will cause the “Fault Detected” message to scroll once a minute on the ITM display. The Modbus™ fault register bit for AutoSpan Reminder Fault will be set and will not clear until the fault condition has been cleared. If an AutoSpan Reminder Fault occurs, the 4-20mA signal remains operational.

4.4 RS-485 Modbus™ Protocol

Model DM-700 sensors feature Modbus™ compatible communications protocol and are addressable via the program mode. Other protocols are available. Contact the Detcon factory for specific protocol requirements. Communication is two wire, half duplex 485, 9600 baud, 8 data bits, 1 stop bit, no parity, with the sensor set up as a slave device. A master controller up to 4000 feet away can theoretically poll up to 256 different sensors. This number may not be realistic in harsh environments where noise and/or wiring conditions would make it impractical to place so many devices on the same pair of wires. If a multi-point system is being utilized, each sensor should be set for a different address. Typical address settings are: 01, 02, 03, 04, 05, 06, 07, 08, 09, 0A, 0B, 0C, 0D, 0E, 0F, 10, 11…etc.

Sensor RS-485 ID numbers are factory default to 01. These can be changed in the field via the Operator Interface described in Section 4.3.5.6.

The following section explains the details of the Modbus™ protocol that the DM-700 sensor supports.

Code 03 - Read Holding Registers is the only code supported by the transmitter. Each transmitter contains 6 holding registers which reflect its current status.

Table 3 Modbus™ Registers

FC	REG	Content Description	R/W	Content Definition		
				Value	**Meaning**	**Range**
03	40000	Device Type	R	8	700 Sensor	
03 06	40001 40001	Read Detectable Range[1,2] Write Detectable Range	R/W	100 10000	For 0-100 For 0-10000[2]	DM – 0 to 10000 FP – Read only TP – 20, 50, 100, 200 IR – 0 to 10000 PI – 0 to 10000
03	40002	Read Concentration[3,2]	R	1000	Bound by range. If > range, this value is in fault.	
03 06	40003 40003	Read AutoSpan Level[4,2] Write AutoSpan Level	R/W	50	Span gas at 50	DM – 1% to 95% of Range (40001) FP – 5% to 95% of Range (40001) TP – 2% to 50% of Range (40001) IR – 5% to 95% of Range (40001) PI – 1% to 95% of Range (40001)
03	40004	Read Sensor Life	R	85	For 85% sensor life	

FC	REG	Content Description	R/W	Content Definition		
				Value	**Meaning**	**Range**
03	40005	Read Fault Status Bits[5]	R	0x0001 0x0002 0x0004 0x0008 0x0010 0x0020 0x0040 0x0080 0x0100 0x0200 0x0400 0x0800 0x1000 0x2000 0x4000 0x8000	Global Fault Auto Span Fault Temperature Fault 4-20mA Fault Input Voltage Fault Memory Fault Processor Fault Clearing Fault Stability Fault Range Fault Sensor Fault Zero Fault Sensor Fault 2 <reserved> In Calibration Communication Error	
03	40006	Read Model #	R	1, 2, 3, 4, 5	DM, FP, IR, TP, PID respectively	
03	40007	Read Days Since Cal	R	29	29days	
03	40008	4-20 Current Output mA x100	R	400	4.00mA	**Range**
03	40009	Read Input Voltage V x100	R	2400	24.00V	
03	40010	Read Temperature	R	28	28 °C	
03/06	40011	Special #1	R/W		Function dependent on value of 40006 (See Special Register Table 4)	
03/06	40012	Special #2	R/W		Function dependent on value of 40006 (See Special Register Table 4)	
03	40013	Special #3	R		Function dependent on value of 40006 (See Special Register Table 4)	

FC	REG	Content Description	R/W	Content Definition		
				Value	Meaning	Range
03/ 06	40014	Special #4	R/W		Function defendant on value of 40006 (See Special Register Table 4)	
03	40015	Calibration Status	R	0x0000	Idle	
				0x0001	Zero Calibration Started	
				0x0002	Span Calibration Started	
				0x0003	Span Set	
				0x0004	Span Calibration Unsuccessful	
06	40015	Calibration Enable	W	0x0001	Set Zero	
				0x0002	Set Span	
				0x0008	Signal simulation mode	
				0x0009	Set FP Bridge Voltage	
				0x000A	Set TP Heater Power	
				0x000B	Set IR Gain	
03	40016	Read Text 1, first char in L	R		Two Char of Gas/Units String[6]	
03	40017	Read Text 2	R		Two Char of Gas/Units String[6]	
03	40018	Read Text 3	R		Two Char of Gas/Units String[6]	
03	40019	Read Text 4	R		Two Char of Gas/Units String[6]	
03	40020	Read Text 5, last char in H	R		Two Char of Gas/Units String[6]	
03	40021	Text null terminator in L	R		Two Char of Gas/Units String[6]	

Integer ranges from 1 all the way to 10,000.

[2] Units are determined by "units" field in the "notation" string

[3] Gas Reading times one *(x 1)* with units in notation string for "Low Range" = 0. Gas Reading times one *(x 10)* with units in notation string for "Low Range" = 1. Gas Reading times one *(x 100)* with units in notation string for "Low Range" = 2.

[4] Span Gas must be less than or equal to Detectable Range and is usually about ½ of it.

[5] Fault status bits self-reset when fault clears

[6] Text in ASCII, in order L byte, H byte, L byte… See field descriptions of notation string.

Gas/Units String

Character #	1	2	3	4	5	6	7	8	9	10	11
Description	Units			0x20	Gas Type						0x00

Units – This field is 'PPM', 'PPB', or '_ _ %' (where ' _ ' is a space, 0x20).

0x20 – The units filed is terminated with an ASCII space (0x20)

Gas Type – This field contains the gas type of the cell. Any ASCII string is permissible

0x00 – The notation string is terminated with an ASCII null character

Table 4 Modbus™ Special Registers

REG	DM (40006 = 1)		FP (40006 = 2)	IR (40006 = 3)	TP (40006 = 4)[1]	PI (40006 = 5)	
40011	Low Range= 0, 1, 2 0: Range >25 (0 decimal place) 1: Range 10-25 (1 decimal place) 2: Range <10 (2 decimal place)		Gas Factor **(R/W)** **Range = 79 to 565**	Gas Factor **(R/W)** **Range = 20 to 565**	Heater Power (mW) **(R/W)**	Low Range= 0, 1, 2 0: Range >25 1: Range 10-25 2: Range <10	
40012	0x8XXX 0x0XXX 0xX000 0xX096 0xX0C8 0xX12C	Positive Polarity Cell Negative Polarity Cell Bias = 0mV Bias = 150mV Bias = 200mV Bias = 300mV	Cal Factor **(R/W)** **Range = 79 to 565**	Active Counts	Heater Voltage (mV)	0x8XXX 0x0XXX 0xX000 0xX096 0xX0C8 0xX12C	Positive Polarity Cell Negative Polarity Cell Bias = 0mV Bias = 150mV Bias = 200mV Bias = 300mV
40013	Gain Code (integer between 0 & 15)		Bridge Current (mA)	Reference Counts	Sensor Resistance (x100 Ω)	Gain Code	
40014	Raw Counts 0-0xFFFF (0x8000 = nominal 0)		Bridge Voltage (mV) **(Read only)**	Range Divisor 1,10,100, or 1000	Heater Current (mA)	Raw Counts	

Only possible ranges are 20, 50, 100, 200. Modbus register 40001 will contain either 20, 50, 100, or 200, range divisor is not necessary.

4.5 Service and Maintenance

4.5.1 Calibration Frequency

In most applications, quarterly to biannual zero and span calibration intervals will assure reliable detection. However, industrial environments differ. Upon initial installation and commissioning, close frequency tests should be performed, weekly to monthly. Test results should be recorded and reviewed to determine a suitable calibration interval.

4.5.2 Visual Inspection

The Sensor should be inspected annually. Inspect for signs of corrosion, pitting, and water damage. During visual inspection, the Splash Guard should be inspected to insure that it is not blocked. Examine the porous 316SS flame arrestor within the sensor's bottom housing for signs of physical blockage or severe corrosion. Also, inspect inside the Junction Box for signs of water accumulation or Terminal Block corrosion.

4.5.3 Condensation Prevention Packet

A moisture condensation packet should be installed in every explosion proof Junction Box. The moisture condensation prevention packet will prevent the internal volume of the J-Box from condensing and accumulating moisture due to day-night humidity changes. This packet provides a critical function and should be replaced annually. Detcon's PN is 960-202200-000.

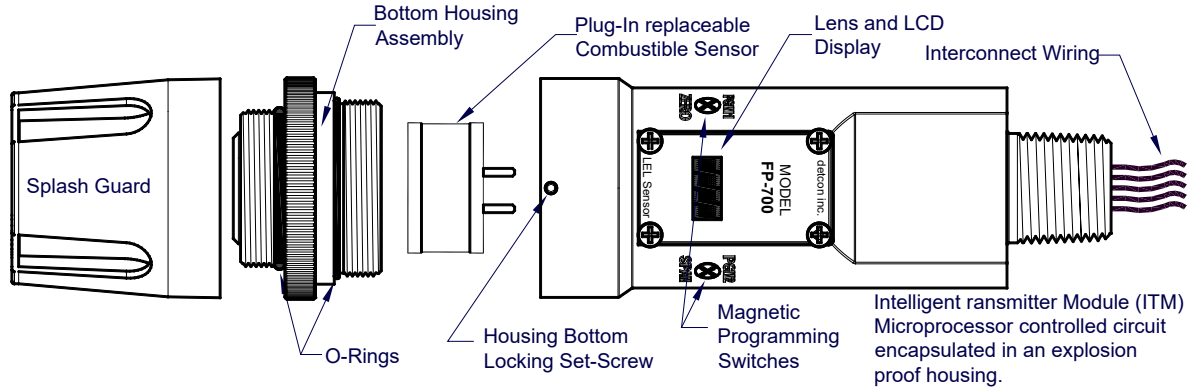

Figure 14 Sensor Assembly

4.5.4 Replacement of Plug-in Combustible Gas Sensor

a) Remove power to FP-700 sensor by lifting the + 24VDC wire in J-Box.

NOTE: It is necessary to remove power while changing the plug-in combustible gas sensor in order to maintain area classification.

b) Use a M1.5 Allen wrench to release the locking setscrew that locks the ITM and bottom housing together (One turn will suffice - Do not remove setscrew completely).

c) Remove splashguard. Unthread and remove the Bottom Housing from the ITM.

d) Gently pull the plug-in combustible gas sensor out of the ITM. Orient the new plug-in sensor so that it matches with the female connector pins. It may be necessary to look from below to assure alignment is correct. When properly aligned, press the sensor in firmly to make the proper connection.

e) Thread the Bottom Housing onto the ITM to a snug fit and tighten the locking setscrew using the M1.5 Allen wrench. Reinstall the splashguard.

e) With the new plug-in sensor physically installed, two menu functions are required to be performed.

1) The Set Bridge Voltage function must be performed to match the new sensor with the ITM (Section 4.3.5.6).

2) Perform a successful AutoZero and AutoSpan to match the new sensor with the ITM (Section 4.3.4).

4.5.5 Replacement of ITM

a) Disconnect all sensor wire connections at the J-Box after removing power source.

NOTE: It is necessary to remove power to the J-Box while changing the ITM in order to maintain area classification.

b) Use wrench and the wrench flats provided at the top section of the ITM and unthread until it can be removed.

c) Use a M1.5 Allen wrench to release the locking setscrew that locks the ITM and bottom housing together (One turn will suffice - Do not remove setscrew completely).

c) Remove splashguard. Unthread and remove the Bottom Housing from the ITM.

e) Gently pull the plug-in combustible gas sensor out of the ITM and set it aside along with the bottom housing and splashguard. Orient the plug in sensor so that it matches with the female connector pins on the new ITM and press the sensor in firmly to make proper connection.

f) Thread the bottom housing onto the ITM until snug, tighten the locking setscrew and reconnect splashguard.

g) Feed the sensor assembly wires through the ¾" female NPT mounting hole and thread the assembly into the J-box until tight and the ITM lens faces toward the front access point. Connect the sensor assembly wires inside J-Box (Refer to Section 4.2.6, and Figure 10).

g) Perform the following menu functions to adapt to the new ITM: Set Bridge Voltage (Section 4.3.5.6), Set Serial ID (Section 4.3.5.6), Set AutoSpan Level (Section 4.3.5.3), and perform a successful AutoZero and AutoSpan calibration to match the sensor with the ITM (Section 4.3.4).

4.5.6 Replacement of FP-700 Sensor Assembly

a) Disconnect all sensor wire connections at the J-Box, after removing power source.

NOTE: It is necessary to remove power to the J-Box while changing the FP-700 sensor in order to maintain area classification.

b) Use wrench and the wrench flats provided at the top section of the sensor and unthread until it can be removed.

c) Feed the new FP-700 sensor assembly wires through the ¾" female NPT mounting hole and thread the assembly into the J-box until tight and the ITM lens faces toward the front access point. Connect the sensor assembly wires inside J-Box (Refer to Section 4.2.6, and Figure 10).

d) FP-700 sensors are factory calibrated. However, they will require an initial AutoZero and AutoSpan (Section 4.3.4). They must also be configured per customer specific application requirements.

4.6 Troubleshooting Guide

Refer to the list of Failsafe Diagnostic features listed in Section 4.3.6.2 for additional reference in troubleshooting activities. Listed below are some typical trouble conditions and their probable cause and resolution path.

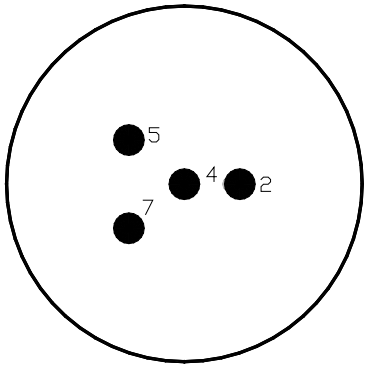

Figure 15 Plug-in Sensor (Bottom View)

Open Sensor Fault

Probable Cause: Plug-in sensor has failed.

Remove plug-in sensor and verify resistance between PIN 4 and PIN 5 and PIN 4 and PIN 2using an ohmmeter. At room temperature, the normal reading range should be 2.5-3.5 ohms for both catalytic beads.

Replace plug-in sensor if either measurement is open circuit or significantly out-of range.

Zero Fault

Probable Causes: Plug-in sensor has drifted.

- Perform AutoZero calculation per Section 4.3.4
- Replace the plug-in sensor.

AutoSpan Calibration Faults – (Range, Stability and Clearing)

To clear any AutoSpan Calibration fault, the AutoSpan process must be completed successfully.

Range Fault

Probable Causes: Failed Sensor, Cal Gas not applied or not applied at appropriate time, or problems w/ cal gas and delivery.

- Check Bridge Voltage (should be 2.7 +/- 0.2VDC).
- Check validity of span gas and flow rate (check MFG date on cal cylinder).
- If using Splashguard with Integral Cal Port, must use Calibration Wind Guard or air movement can compromise span gas delivery.
- Make sure correct Cal Factor is set
- Check for obstructions through stainless steel sinter element (including being wet).
- Replace the plug-in sensor.

Stability Fault

Probable Causes: Failed Sensor, empty or close to empty Cal Gas Cylinder, or problems w/ cal gas and delivery.

- Check Bridge Voltage (should be 2.7 +/- 0.2VDC).
- Check validity of span gas and flow rate (check MFG date on cal cylinder).
- If using Splashguard with Integral Cal Port, must use Calibration Wind Guard or air movement can compromise span gas delivery.
- Make sure correct Cal Factor is set
- Check for obstructions through stainless steel sinter element (including being wet).
- Replace the plug-in sensor.

Clearing Fault

Probable Causes: Failed Sensor, Cal Gas not removed at appropriate time, problems w/ cal gas and delivery, or Background combustible gases preventing clearing.

- Confirm that no combustible gasses are present in background.
- Check Bridge Voltage (should be 2.7 +/- 0.2VDC).
- Check validity of span gas and flow rate (check MFG date on cal cylinder).
- Make sure correct Cal Factor and Gas Factor is set
- Check for obstructions through stainless steel sinter element (including being wet).
- Replace the plug-in sensor.

Poor Calibration Repeatability

Probable Causes: Failed Sensor, use of wrong Cal Gas, problems w/ cal gas and delivery, or Poison or Inhibitor Gases.

Check for adequate Sensor Life.

- Check Bridge Voltage (should be 2.7 +/- 0.2VDC).
- Check validity of span gas and flow rate (check MFG date on cal cylinder).
- Check for obstructions through stainless steel sinter element (including being wet).
- Evaluate area for presence of poisoning or inhibiting gases as listed in Section 4.2.3.
- Increase calibration frequency.
- Note the sensor's serial # and report repetitive problems to Detcon's Repair Department.
- Replace plug-in sensor.

Unstable Output/ Sudden spiking

Possible Causes: Unstable power supply, inadequate grounding, or inadequate RFI protection.

- Verify Power source is stable.
- Verify field wiring is properly shielded and grounded.
- Contact Detcon to optimize shielding and grounding.

Nuisance Alarms

- Check condulet for accumulated water and abnormal corrosion on terminal blocks.
- If nuisance alarms are happening at night, suspect condensation in condulet.
- Add or replace Detcon's Condensation Prevention Packet P/N 960-202200-000.
- Investigate the presence of any other combustible gases that may be causing sensor response.

Processor and/or Memory Faults

- Recycle power in attempt to clear problem
- Restore Factory Defaults - This will clear the processor's memory and may correct problem.
- Remember to re-enter all customer settings for range and cal gas level after Restore Factory Defaults.
- If problem persists, replace the Intelligent Sensor Module.

Unreadable Display

- If due to excessive sunlight, install a sunshade to reduce glare.

Nothing Displayed – Transmitter not Responding

- Verify condulet has no accumulated water or abnormal corrosion.
- Verify required DC power is applied to correct terminals.
- Swap with a known-good ITM to determine if ITM is faulty.

Faulty 4-20mA Output

If Sensor has a normal reading with no Faults displayed, and the 4-20 mA signal output is 0mA….

- Check that wiring is properly connected at terminal blocks and through to controller inputs.
- The 4-20mA output loop must be closed to avoid a Loop Fault. If the 4-20mA output is not being used the green wire from the sensor must be connected to the (-) terminal on the Transient Protection Module to ensure that it does not create a 4-20mA Fault. (section 4.2.6)
- Perform a "Signal Output Check" sequence via Section 4.3.5.8 and verify 4-20mA output with Current Meter.
- Swap with new ITM to determine if the ITM's 4-20mA output circuit is faulty.
- If the 4-20mA current loop is still out of tolerance, contact Detcon at Detcon-service@teledyne.com, or contact Detcon customer service.

No Communication - RS-485 Modbus™

If unit has a normal reading with no Faults displayed and the Modbus™ is not communicating….

- Verify that the correct (and non-duplicated) serial address is entered (per Section 4.3.5.6).
- Check that wiring is properly connected at terminal blocks and through to controller inputs.
- Perform a "Signal Output Check" sequence via Section 4.3.5.8 and troubleshoot wiring.
- Swap with new ITM to determine if the ITM's serial output circuit is faulty.

4.7 Customer Support and Service Policy

Detcon
Shipping Address: 4055 Technology Forest Blvd., The Woodlands Texas 77381
Mailing Address: P.O. Box 8067, The Woodlands Texas 77387-8067
Phone: 713.559.9200

- www.teledynegasandflamedetection.com
- detcon-service@teledyne.com
- detcon-sales@teledyne.com

All Technical Service and Repair activities should be handled by the Detcon Service Department via phone or email at contact information given above. RMA numbers should be obtained from the Detcon Service Department prior to equipment being returned. For on-line technical service help, customers should have the model number/ part number, and serial number of product type in question.

All Sales activities (including spare parts purchase) should be handled by the Detcon Sales Department via phone or email at contact information given above.

Warranty Notice

Teledyne Detcon Inc. warrants the Model FP-700 gas sensor to be free from defects in workmanship of material under normal use and service for two years from the date of shipment on the ITM electronics and for a 2-year period on the plug-in combustible gas sensor. See Warranty details below.
Teledyne Detcon Inc. will repair or replace without charge any such equipment found to be defective during the warranty period. Full determination of the nature of, and responsibility for, defective or damaged equipment will be made by Teledyne Detcon Inc. personnel.
Defective or damaged equipment must be shipped to the Teledyne Detcon Inc. factory or representative from which the original shipment was made. In all cases this warranty is limited to the cost of the equipment supplied by Teledyne Detcon Inc. The customer will assume all liability for the misuse of this equipment by its employees or other contracted personnel.

All warranties are contingent upon the proper use in the application for which the product was intended and does not cover products which have been modified or repaired without Teledyne Detcon Inc. approval, or which have been subjected to neglect, accident, improper installation or application, or on which the original identification marks have been removed or altered.

Except for the express warranty stated above, Teledyne Detcon Inc. disclaims all warranties with regard to the products sold. Including all implied warranties of merchantability and fitness and the express warranties stated herein are in lieu of all obligations or liabilities on the part of Teledyne Detcon Inc. for damages including, but not limited to, consequential damages arising out of, or in connection with, the performance of the product.

4.8 FP-700 Sensor Warranty

Plug-in Combustible Gas Sensor Warranty

Teledyne Detcon Inc. warrants, under normal intended use, each new plug-in combustible gas sensor (PN 370-201600-700). The warranty period begins on the date of shipment to the original purchaser and ends 2 years thereafter. The sensor element is warranted free of defects in material and workmanship. Should any sensor fail to perform in accordance with published specifications within the warranty period, return the defective part to Detcon, Inc., 4055 Technology Forest Blvd., The Woodlands, Texas 77381, for necessary repairs or replacement.

Terms & Conditions

* The original serial number must be legible on each sensor element.

* Shipping point is FOB the Detcon factory.

* Net payment is due within 30 days of invoice.

* Detcon, Inc. reserves the right to refund the original purchase price in lieu of sensor replacement.

ITM Electronics Warranty

Teledyne Detcon Inc. warrants, under intended normal use, each new Model 700 Intelligent Sensor Module to be free from defects in material and workmanship for a period of two years from the date of shipment to the original purchaser. All warranties and service policies are FOB the Detcon facility located in The Woodlands, Texas.

Terms & Conditions

* The original serial number must be legible on each ITM.

* Shipping point is FOB the Detcon factory.

* Net payment is due within 30 days of invoice.

* Detcon, Inc. reserves the right to refund the original purchase price in lieu of ITM replacement.

4.9 Appendix

4.9.1 Specifications

Sensor Type:	Continuous diffusion/adsorption type
	Matched-Pair Catalytic Bead type
	True plug-in replaceable type
Sensor Life:	3-5 years typical
Measuring Ranges:	0-100% LEL (Lower Explosion Limit)
Accuracy/ Repeatability:	±3% 0-50% LEL; ±5% 50-100% LEL
Response/Clearing Time:	T50 < 10 seconds, T90 < 30 seconds
Zero Drift:	<5% per year
Outputs:	Linear 4-20mA DC
	RS-485 Modbus™ RTU
Ingress Protection:	NEMA 4X, IP66
Safety Approvals:	cCSAus Performance to ANSI/ISA 12.13.01-2013 (60079-29-1) and CSA22.2 #152
	CE Marking
	SIL2 Certified to IEC 61508
Warranty:	Plug-in detector – 2 years Transmitter – 2 years

Environmental Specifications

Operating Temperature:	-40°F to +158F°; -40°C to +70°C
Storage Temperature:	-40°F to +167F°; -40°C to +75°C
Operating Humidity:	0-99% RH (Non-condensing)

Mechanical Specifications

Dimensions:	7"H x 2.2" Dia.; 178mmH x 65mm Dia. (sensor assembly only)
	11"H x 6.1"W x 3.75"D; 280mmH x 155mmW x 96mmD (with junction box) Mounting holes (J-box) 5.5"; 140mm center to center
Weight:	2 lbs; 0.907kg (sensor only)
	6 lbs; 2.72kg (w/aluminum j-box)
	9 lbs; 4.08kg (w/stainless steel j-box)

Electrical Specifications

Power Input:	11-30VDC
Power Consumption:	Normal operation = 68mA (<1.7 watt)
	Maximum = 85mA (2 watts)
Inrush current:	1.0A @ 24V
RFI/EMI Protection:	Complies with EN50270:2015
Analog Output: 24VDC)	Linear 4-20mA DC current (1000 ohms maximum loop load @

0mA	All Fault Diagnostics
2mA	In-Calibration
4-20mA	0-100% full-scale
22mA	Over-range condition

Serial Output:	RS-485 Modbus™ RTU
Baud Rate:	9600 BPS (9600,N, 8 ,1 Half Duplex)
Status Indicators:	4-digit LED Display with gas concentration, full-script menu prompts for AutoSpan, Set-up Options, and Fault Reporting
Faults Monitored:	Operating Temperature, Loop, Input Voltage, Bridge Voltage, Zero, Sensor, Processor, Memory, Calibration
Cable Requirements:	Power/Analog: 3-wire shielded cable Maximum distance is 13,300 feet with 14 AWG Serial Output: 2-wire twisted-pair shielded cable specified for RS-485 use Maximum distance is 4,000 feet to last sensor
I/O Protection:	Over-Voltage, Mis-wiring, EMI/RFI Immunity

4.9.2 Spare Parts, Sensor Accessories, Calibration Equipment

Part Number	SPARE PARTS
927-525500-100	**FP-700 INTELLIGENT SENSOR MODULE (ITM) (0-100% RANGE)**
927-525500-050	**FP-700 INTELLIGENT SENSOR MODULE (ITM) (0-50% RANGE)**
602-003152-000	Model 700 Housing Bottom Assembly (includes Flame Arrestor)
370-201600-700	Replacement Plug-in Sensor
500-003087-100	Transient Protection PCA
Sensor Accessories	
897-850800-010	**NEMA 7 ALUMINUM ENCLOSURE LESS COVER – 3 PORT**
897-850400-010	NEMA 7 Aluminum Enclosure Cover (Blank)
897-850801-316	NEMA 7 316SS Enclosure less cover – 3 port
897-850401-316	NEMA 7 316SS Enclosure Cover (Blank)
613-120000-700	Sensor Splashguard with integral Cal Port
943-002273-000	Harsh Environment Sensor guard
327-000000-000	Programming Magnet
960-202200-000	Condensation prevention packet (for J-Box replace annually)

Calibration Accessories	
943-000000-000	Calibration Wind Guard
943-000006-132	Threaded Calibration Adapter
943-020000-000	Span Gas Kit: Includes calibration adapter, span gas humidifier, 200cc/min fixed flow regulator, and carrying case. (Not including gas).
942-520124-050	Span Gas cylinder: 50% LEL Methane balance air Contains 104 liters of gas and is good for 175 calibrations
942-520124-025	Span Gas cylinder: 25% LEL Methane balance air Contains 104 liters of gas and is good for 175 calibrations
943-090005-502	200cc/min Fixed Flow Regulator for span gas bottle
Recommend Spare Parts for 2 Years	
927-525500-100	**FP-700 INTELLIGENT SENSOR MODULE (ITM) (0-100% LEL RANGE)**
927-525500-050	**FP-700 INTELLIGENT SENSOR MODULE (ITM) (0-50% LEL RANGE)**
602-003152-000	Housing Bottom Assembly (includes Flame Arrestor)
370-201600-700	Replacement Plug-in Sensor
500-003087-100	Transient Protection PCA
960-202200-000	Condensation prevention packet (for J-Box replace annually)

5. Detcon Model IR-700

IR-700 Combustible Gas Sensor

0-100% LEL and 0-50% LEL range

IR-700 CO_2 Carbon Dioxide Gas Sensor

All Ranges

TELEDYNE DETCON

TELEDYNE DETCON, Inc.
4055 Technology Forest Blvd.,
The Woodlands, Texas 77381
Phone 713.559.9200

WWW.TELEDYNEGASANDFLAMEDETECTION.COM

5.1 Introduction

5.1.1 Description

Detcon Model IR-700 combustible gas sensors are non-intrusive "Smart" sensors designed to detect and monitor combustible hydrocarbon gases in air. The range of detection is 0-100% LEL or 0-50% LEL. The Model IR-700 CO_2 Sensor is designed to detect CO_2 in air at ranges from 0-.3% to 0-100% by Volume. The sensor features an LED display of current reading, fault and calibration status. The unit is equipped with standard analog 4-20mA and Modbus™ RS-485 outputs. A primary feature of the sensor is its method of automatic calibration, which guides the user through each step via fully scripted instructions shown on the LED display. The microprocessor-supervised electronics are packaged in an encapsulated module and housed in an explosion proof casting. The unit includes a 4 character alpha/numeric LED used to display sensor readings and the sensor's menu-driven interface when the hand-held programming magnet is used.

5.1.1.1 Non-Dispersive Infrared (NDIR) Optical Sensor Technology

The sensor technology is designed as a miniature plug-in replaceable component, which can easily be changed out in the field. The NDIR sensor consists of an infrared lamp source, two pyro electric detectors, and an optical gas sample chamber. The lamp source produces infrared radiation, which interacts with the target gas as it is reflected through the optical gas sample chamber. The infrared radiation contacts each of the two pyro electric detectors at the completion of the optical path. The "active" pyro electric detector is covered by a filter specific to the part of the IR spectrum where the target gas absorbs light. The "reference" pyro electric detector is covered by a filter specific to the non-absorbing part of the IR spectrum. When the target gas is present, it absorbs IR radiation and the signal output from the active detective decreases accordingly. The reference detector output remains unchanged. The ratio of the active and reference detector outputs are then used to compute the target gas concentration.

The technique is referred to as non-selective and may be used to monitor most any combustible hydrocarbon gas. The technique for CO_2 is similar except that the sensor provides a selective response to CO_2. Unlike catalytic bead type sensors, Detcon IR sensors are completely resistant to poisoning from corrosive gases and they can operate in the absence of an oxygen background. The sensors are characteristically stable and capable of providing reliable performance for periods exceeding 5 years in most industrial environments.

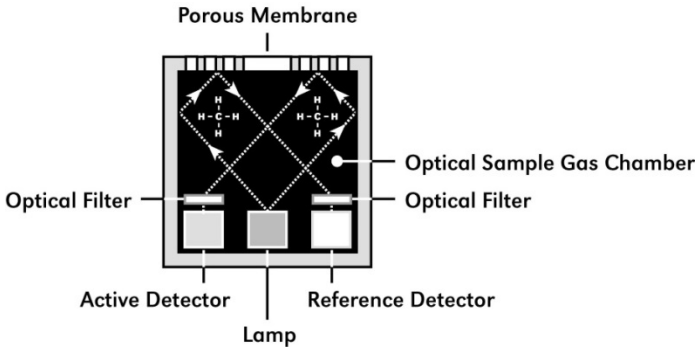

Figure 16 Sensor Cell Construction

5.1.1.2 Principle of Operation

The target gas diffuses through a sintered stainless steel flame arrestor and into the volume of the sample gas optical chamber. An alternating miniature lamp provides a cyclical IR radiation source, which reflects through the optical gas sample chamber and terminates at two pyro electric detectors. The active and reference pyro electric detectors each give an output which measures the intensity of the radiation contacting their surface. The active detector is covered by an optical filter specific to the part of the IR spectrum where the target gas absorbs light. The reference detector is covered by a filter specific to the non-absorbing part of the IR spectrum. When present, the target gas absorbs a fraction of the IR radiation and the signal output from the active detector decreases accordingly. The signal output of the reference detector remains unchanged in the presence of the target gas. The ratio of the active/reference signal outputs is then used to compute the target gas concentration. By using the ratio of the active/reference signal outputs, measurement drift caused by the changes in the intensity of the IR lamp source or changes in the optical path's reflectivity is prevented.

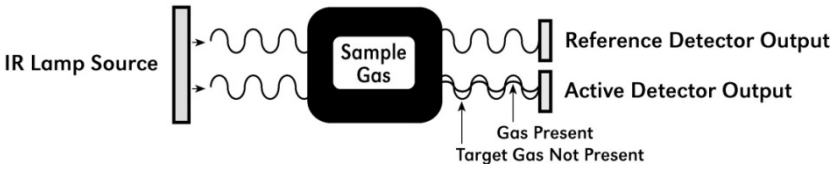

Figure 17 Principle of Operation

5.1.1.3 Performance Characteristics

The IR sensor maintains strong sensitivity to most all combustible hydrocarbon gases in the Lower Explosive Limit (LEL) range, as shown in the response curve illustration below. When compared with the typical catalytic bead LEL sensor, the IR sensor exhibits improved long-term zero and span stability. Typical zero calibration intervals would be quarterly to semi-annual and typical span intervals would be semi-annual to annual. However, actual field experience is always the best determination of appropriate calibration intervals.

NOTE: The IR-700 sensor will not respond to combustible gases that are not hydrocarbons, such as H_2, NH_3, CO, H_2S….etc. It can only be used to measure hydrocarbon type gases.

The IR sensor generates different signal sensitivity levels for different combustible hydrocarbon target gases. Unless otherwise specified the IR-700 sensor will be factory calibrated for methane service. If the target hydrocarbon gas is other than methane, then the unit will have to be span calibrated and configured accordingly per this Instruction Manual.

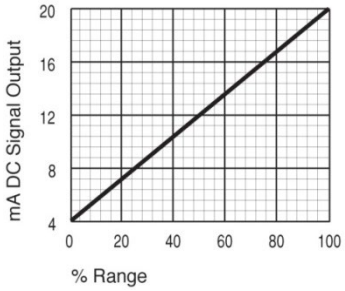

Figure 18 Response Curve

5.1.2 Sensor Electronics Design

5.1.2.1 Intelligent Transmitter Module

The Intelligent Transmitter Module (ITM) is a fully encapsulated microprocessor-based package that accepts a plug-in field replaceable combustible gas sensor and for IR-700 CO_2 sensors, a plug-in replaceable CO_2 sensor. Circuit functions include extensive I/O circuit protection, sensor pre-amplifier, on-board power supplies, microprocessor, LED display, magnetic programming switches, a linear 4-20mA DC output, and a Modbus™ RS-485 output. Magnetic program switches located on either side of the LED Display are activated via a hand-held magnetic programming tool, thus allowing non-intrusive operator interface with the ITM. Calibration can be accomplished without declassifying the area. Electrical classifications are Class I, Division 1, Groups B C D, Class I, Zone 1, Group IIB+H_2, and II 2G Ex db IIB+H_2 Gb.

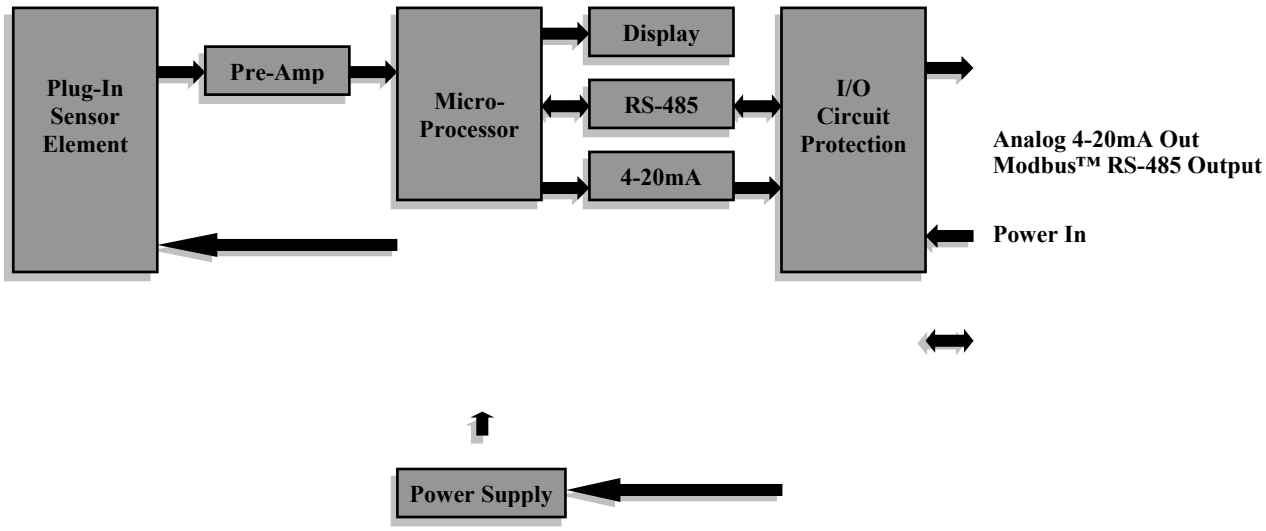

Figure 19 ITM Circuit Functional Block Diagram

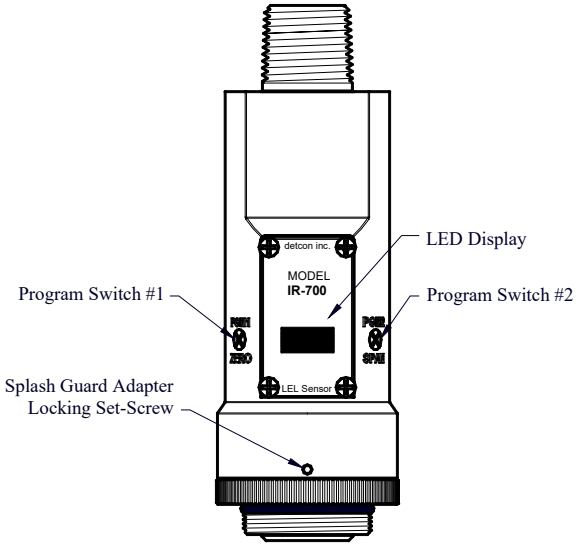

Figure 20 Sensor Assembly Front View

5.1.3 Modular Mechanical Design

The Model IR-700 Sensor Assembly is completely modular and made up of four parts (See Figure 21 for Assembly Breakaway):

5) IR-700 Intelligent Transmitter Module (ITM)
6) Field Replaceable Plug-in Infra-Red Gas Sensor
7) Model 700 Housing Bottom Assembly (contains the Housing Bottom, Flame Arrestor, Retaining Ring, and rubber O-Rings)
8) Splash Guard.

NOTE: All metal components are constructed from electro-polished 316 Stainless Steel in order to maximize corrosion resistance in harsh environments.

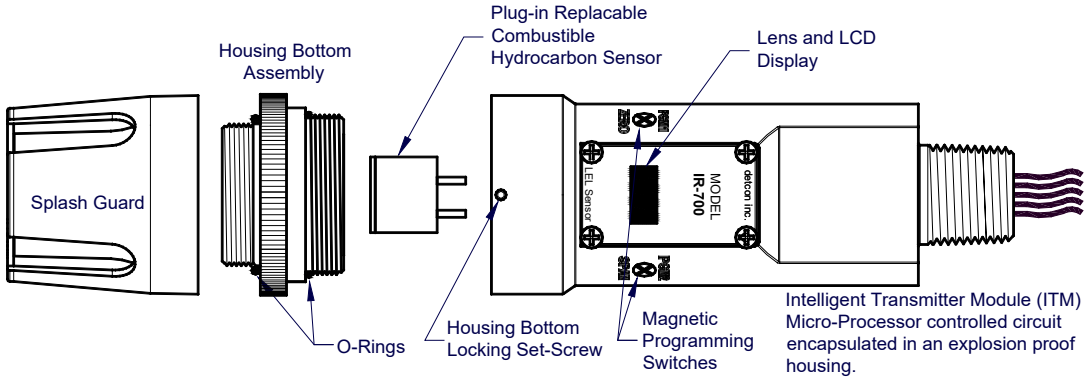

Figure 21 Sensor Assembly Breakaway

5.1.4 Plug-in Replaceable Sensor

The Detcon IR combustible hydrocarbon gas sensor is a unique and miniaturized single-package optical design that generates enough internal heat to prevent condensation. It is packaged as a true plug-in replaceable type sensor with over-sized gold-plated connections that eliminate corrosion problems. It can be accessed and replaced in the field very easily by releasing the locking screw and unthreading the housing bottom. The Detcon IR combustible hydrocarbon gas sensor and the CO_2 gas sensor have an infinite shelf life and are supported by a 5-year pro-rated warranty. The expected service life is 5 years or greater.

Figure 22 IR Sensor Cell

5.2 Installation

5.2.1 ATEX Operational Guidelines for Safe Use

1. Install sensor only in areas with classifications matching with those described on the ATEX approval label. Follow all warnings listed on the label and in the manual.

2. Ensure that the Housing Bottom and plug-in sensor are installed during operation. The Housing Bottom should be threaded tightly to the Intelligent Transmitter Module. The locking setscrew (M3.5 x 0.6 6g6h Stainless Steel Allen set screw cup point with yield strength of greater than 40,000 PSI, typical 80,000 PSI) should then be tightened down to keep the Housing Bottom from being inadvertently removed or from becoming loose under vibration. The locking setscrew ensures that Housing Bottom is only removable by authorized personnel with the use of special tools. A M1.5 Allen Wrench is required. If screw requires replacement, only an identical screw may be used.

3. Removal of the Housing Bottom violates the Ex db protection method and hence power must be removed from the sensor prior its safe removal.

4. The screws holding down the retaining plate label are special fasteners of type Stainless Steel, Phillips Pan-head Machine screw, M3 x 0.5 6g6h having yield strength of greater than 40,000 PSI, typical 80,000 PSI. If screw requires replacement, only an identical screw may be used.

5. Proper precautions should be taken during installation and maintenance to avoid the build-up of static charge on the plastic components of the sensor. This includes the splashguard.

6. Do not operate the sensor outside of the stated operating temperature limits.

7. Do not operate the sensor outside the stated operating limits for voltage supply.

5.2.2 Sensor Placement

Selection of sensor location is critical to the overall safe performance of the product. Five factors play an important role in selection of sensor locations:

(1) Density of the gas to be detected

(2) Most probable leak sources within the industrial process

(3) Ventilation or prevailing wind conditions

(4) Personnel exposure.

(5) Maintenance access.

Density

Placement of sensors relative to the density of the target gas is such that sensors for the detection of heavier than air gases should be located within 4 feet of grade as these heavy gases will tend to settle in low lying areas. For gases lighter than air, sensor placement should be 4-8 feet above grade in open areas or in pitched areas of enclosed spaces.

NOTE: Methane is lighter than air. Most other combustible hydrocarbon gases are heavier than air. Compare the molecular weight, density, or specific gravity of the target gas(es) with that of air to determine appropriate placement.

Leak Sources

The most probable leak sources within an industrial process include flanges, valves, and tubing connections of the sealed type where seals may either fail or wear. Other leak sources are best determined by facility engineers with experience in similar processes.

Ventilation

Normal ventilation or prevailing wind conditions can dictate efficient location of gas sensors in a manner where the migration of gas clouds is quickly detected.

Personnel Exposure

The undetected migration of gas clouds should not be allowed to approach concentrated personnel areas such as control rooms, maintenance or warehouse buildings. A more general and applicable thought toward selecting sensor location is combining leak source and perimeter protection in the best possible configuration.

Maintenance Access

Consideration should be given to providing easy access for maintenance personnel. Consideration should also be given to the consequences of close proximity to contaminants that may foul the sensor prematurely.

NOTE: In all installations the gas sensor should point straight down. Refer to Figure 20. Improper sensor orientation may result in false readings and permanent sensor damage.

Additional Placement Considerations

The sensor should not be positioned where it may be sprayed or coated with surface contaminating substances. Painting sensor assemblies is prohibited.

Although the sensor is designed to be RFI resistant, it should not be mounted in close proximity to high-powered radio transmitters or similar RFI generating equipment.

When possible, mount the sensor in an area void of high wind, accumulating dust, rain, or splashing from hose spray, direct steam releases, and continuous vibration. If the sensor cannot be mounted away from these conditions, then make sure the Detcon Harsh Environment Splashguard accessory is used.

Do not mount in locations where temperatures will exceed the operating temperature limits of the sensor. Where direct sunlight leads to exceeding the high temperature-operating limit, use a sunshade to help reduce temperature.

5.2.3 Sensor Contaminants and Interference

Detcon IR-700 combustible hydrocarbon gas sensors may be adversely affected by exposure to certain airborne substances. Loss of sensitivity or corrosion may be gradual if such materials are present in sufficient concentrations.

The performance of the IR sensor may be impaired during operation in the presence of substances that can cause corrosion on gold plating. Other inhibiting substances are those that can coat the internal walls of the optical chamber and reduce reflectivity. These include but are not limited to heavy oil deposits, dust/powder, water condensation, and salt formation. Continuous and high concentrations of corrosive gases (such as Cl_2, H_2S, HCl …etc.) may also have a detrimental long-term effect on the sensor's service life.

The presence of such substances in an area does not preclude the use of this sensor technology, although it is likely that the sensor lifetime will be shorter as a result. Use of this sensor in these environments may require more frequent calibration checks to ensure safe system performance.

For the IR-700 Combustible gas sensors there are no known cross-interference gases that are not combustible hydrocarbon gases. For the IR-700 CO_2 Sensor, there are no known cross interference gases.

5.2.4 Mounting Installation

The IR-700 sensor assembly is designed to be threaded into a ¾" female NPT fitting of a standard cast metal Explosion-Proof Enclosure or Junction Box. There are two wrench flats on the upper section of the sensor that should be used to thread the sensor into the ¾" female NPT receiving connection. Thread the sensor up until tight (5 turns is typically expected) and until the display is facing the direction that the sensor will normally be viewed and accessed.

The IR-700 should be vertically oriented so that the sensor points straight downward. The explosion-proof enclosure or junction box would then typically be mounted on a wall or pole. Detcon provides a standard selection of junction boxes available as sensor accessories (See Figure 23 below), but any appropriately rated enclosure with a downward facing ¾" NPT female connection will suffice.

When mounting on a wall, it is recommended to use a 0.25"-0.5" spacer underneath the mounting ears of the Detcon standard J-Box to offset the sensor assembly from the wall and create open access around the sensor assembly. Spacing requirements for other junction boxes may vary.

When mounting on a pole, secure the Junction Box to a suitable mounting plate and attach the mounting plate to the pole using U-Bolts. (Pole-Mounting brackets for Detcon J-Box accessories are available separately.)

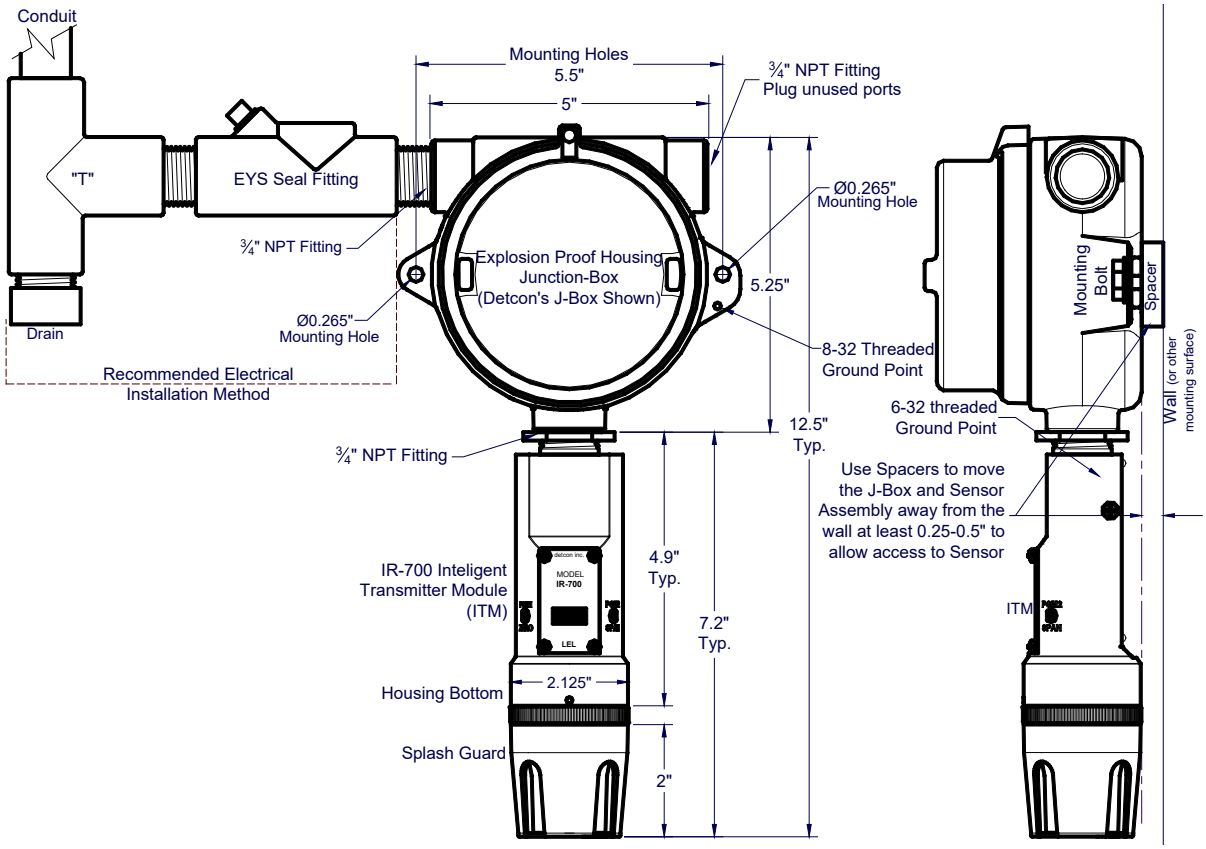

Figure 23 **Outline and Mounting Dimensions**

5.2.5 Electrical Installation

The Sensor Assembly should be installed in accordance with local electrical codes. The sensor assemblies are CSA/NRTL approved (US and Canada) for Class I, Division 1, Groups B, C, & D area classifications, and are ATEX Approved for II 2G Ex db IIB+H_2 Gb area classifications.

Proper electrical installation of the gas sensor is critical for conformance to Electrical Codes and to avoid damage due to water leakage. Refer to Figure 24 and Figure 25 for proper electrical installation.

NOTE: If a conduit run exits the secondary port, repeat the installation technique shown in Figure 24.

In Figure 24, the drain allows H_2O condensation inside the conduit run to safely drain away from the sensor assembly. The electrical seal fitting is required to meet the National Electrical Code per NEC Article 500-3d (or Canadian Electrical Code Handbook Part 1 Section 18-154). Requirements for locations of electrical seals are covered under NEC Article 501-5. Electrical seals also act as a secondary seal to prevent water from entering the wiring terminal enclosure. However, they are not designed to provide an absolute water-tight seal, especially when used in the vertical orientation.

NOTE: A conduit seal is typically required to be located within 18" of the Stainless Steel J-Box and Sensor Assembly or at the entry of the Aluminum J-Box and Sensor assembly for North American installations. Crouse Hinds type EYS2, EYD2 or equivalent are suitable for this purpose.

NOTE: The Detcon Warranty does not cover water damage resulting from water leaking into the enclosure. However, since the electronics are 100% epoxy encapsulated, only the wire terminations could get wet. Moisture could cause abnormal operation and possibly corrosion to the terminal connections, but permanent damage to the sensor would not be expected.

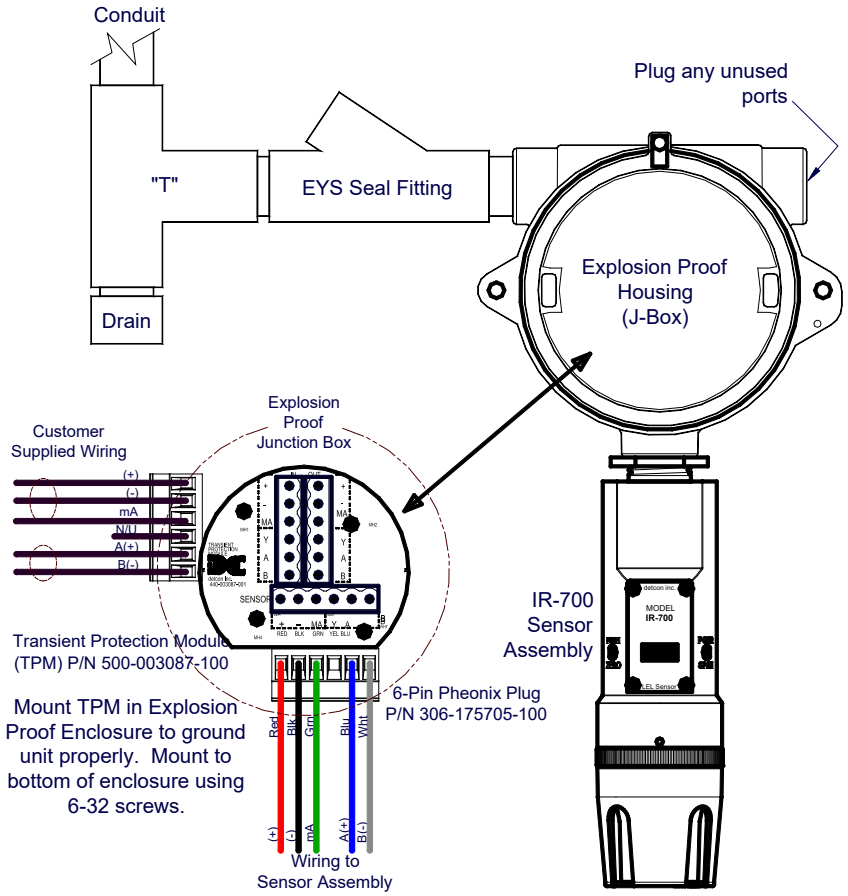

Figure 24 Typical Installation

NOTE: Any unused ports shall be blocked with suitable ¾" male NPT plugs. Detcon supplies one ¾" NPT male plug with their accessory J-box enclosures (Detcon P/N 8522-750). If connections are other than ¾" NPT, use an appropriate male plug of like construction material.

NOTE: All devices connecting to the ¾" NPT conduit entries should be tightened to a minimum of 16 foot-pounds torque.

NOTE: The flamepath joints are not intended to be repaired if damaged.

NOTE: For ATEX use, cable glands, adapters, and/or blanking elements shall be ATEX certified to Ex d IIC and shall be installed.

WARNING: Cables and cable glands must be rated for ≥90°C.

NOTE: Connect earth wire to crimped terminal (≥4mm^2) (Internal and external ground points).

5.2.6 Field Wiring

Detcon Model IR-700 combustible hydrocarbon gas sensor assemblies require three conductor connections between power supplies and host electronic controller's 4-20mA output, and 2 conductor connections for the Modbus™ RS-485 serial interface. Wiring designations are + (DC), – (DC), mA (sensor signal), and Modbus™ RS-485 A (+), and B (-). Maximum wire length between sensor and 24VDC source is shown in the Table below. Maximum wire size for termination in the Detcon J-Box accessory is 14AWG.

Table 5 Wire Gauge vs. Distance

AWG	Wire Dia.	Meters	Feet	Over-Current Protection
22	0.723mm	700	2080	3A
20	0.812mm	1120	3350	5A
18	1.024mm	1750	5250	7A
16	1.291mm	2800	8400	10A
14	1.628mm	4480	13,440	20A

NOTE 1: Wiring table is based on stranded tinned copper wire and is designed to serve as a reference only.

NOTE 2: Shielded cable is required for installations where cable trays or conduit runs include high voltage lines or other possible sources of induced interference. Separate conduit runs are highly recommended in these cases.

NOTE 3: The supply of power should be from an isolated source with over-current protection as stipulated in table.

Terminal Connections

CAUTION: **Do not apply System power to the sensor until all wiring is properly terminated. Refer to Section 5.2.7.**

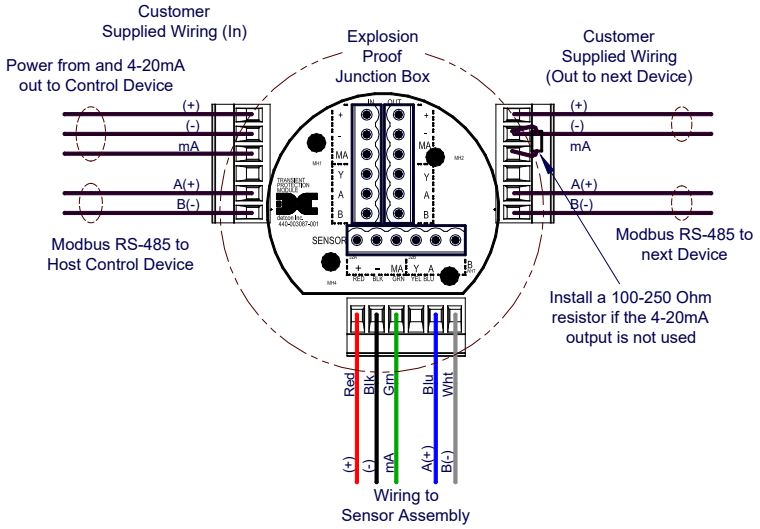

Figure 25 Sensor Wire Connections

a) Remove the junction box cover. Identify the terminal blocks for customer wire connections.

b) Observing correct polarity, terminate the 3-conductor 4-20mA field wiring (+, -, mA) to the sensor assembly wiring in accordance with the detail shown in Figure 25. If the 4-20mA output is not used, the green wire from the sensor must be connected to the (-) terminal on the Transient Protection Module.

NOTE: If the 4-20mA output is not being used, the Green wire from the sensor *must* be connected to the Black wire at the (-) terminal on the Transient Protection Module to ensure RS-485 communication is not disrupted by a 4-20mA Fault.

c) If applicable, terminate the RS-485 serial wiring as shown in Figure 25. Use the second plug (Out) as termination point on the customer side to facilitate a continuous RS-485 serial loop

The RS-485 (if applicable) requires 24 gauge, two conductor, shielded, twisted pair cable between sensor and host controller. General Cable Commodore part number ZO16P0022189 is recommended.

NOTE: Install a 120 ohm resistor across A & B terminals on the last sensor in the serial loop.

d) Trim all exposed wire leads if they are not permanently landed in a terminal block.

e) Replace the junction box cover.

5.2.7 Initial Start Up

Upon completion of all mechanical mounting and termination of all field wiring, apply system power in the range of 11.5-30 VDC (24 VDC typical) and observe the following normal conditions:

a) IR-700 display reads “0”, and no fault messages are flashing.

b) A temporary non-zero reading may occur as the sensor reaches stabilization. The reading will converge to “0” within 1-2 minutes of power-up, assuming there is no combustible gas in the area of the sensor.

NOTE: The 4-20mA signal is held constant at 4mA for the first two minutes after power up.

Initial Operational Tests

After a warm up period of 1 hour, the sensor should be checked to verify sensitivity to combustible gas. For the IR-700 CO_2 series sensors, test the sensor with a suitable CO_2 span gas.

Material Requirements

- Detcon PN 613-120000-700 700 Series Splash Guard with integral Cal Port –OR-
- Detcon PN 943-000006-132 Threaded Calibration Adapter
- Detcon PN 942-520124-050 Span Gas; 50% LEL methane/balance Air at fixed flow rate of 200 cc/min (for 0-100% range)
- Detcon PN 942-520124-025 Span Gas; 25% LEL methane/balance Air at fixed flow rate of 200 cc/min (for 0-50% range)

a) Attach the calibration adapter to the threaded sensor housing. Apply the test gas at a controlled flow rate of 200cc/min. Allow 1-2 minutes for the reading to stabilize. Observe that during the 1-2 minutes the ITM display increases to a level near that of the applied calibration gas value.

b) Remove test gas and observe that the ITM display decreases to “0”.

Initial operational tests are complete. Detcon IR-700 combustible gas sensors are factory calibrated prior to shipment, and should not require significant adjustment on start up. However, it is recommended that a complete calibration test and adjustment be performed 16 to 24 hours after power-up. Refer to zero and span calibration instructions in Section 5.3.4.

5.3 Operation

5.3.1 Programming Magnet Operating Instructions

The Operator Interface of the Model 700 Series gas sensors is accomplished via two internal magnetic switches located to either side of the LED display (see Figure 27). The two switches, labelled “PGM1” and “PGM2”, allow for complete calibration and configuration and thereby eliminate the need for area de-classification or the use of hot permits.

Figure 26 Magnetic Programming Tool

The magnetic programming tool (Figure 27) is used to operate the magnetic switches. Switch action is defined as momentary contact, 3-second hold, and 10-second hold. (Hold times are defined as the time from the point when the arrow-prompt “➔“appears.) For momentary contact use, the programming magnet is briefly held over a switch location. For 3-second hold, the programming magnet is held in place over the switch location for three seconds. For 10-second hold, the programming magnet is held in place over the switch location for 10 seconds. The 3 and 10 second holds are generally used to enter calibration/program menus and save new data. The momentary contact is generally used to move between menu items and to modify set-point values. Arrows (“➔” and “➔”) are used on the LED display to indicate when the magnetic switches are activated. The location of “PGM1” and “PGM2” are shown in Figure 27.

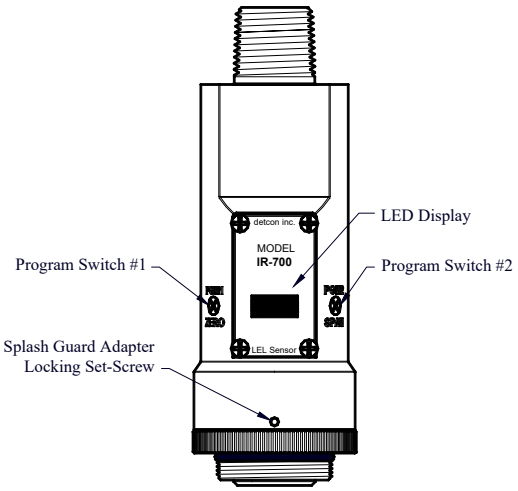

Figure 27 Magnetic Programming Switches

NOTE: While in the Program Mode, if there is no magnetic switch interaction after 4 consecutive menu scrolls, the sensor will automatically revert to normal operating condition. While changing values inside menu items, **if there is no magnet activity after 3-4 seconds the sensor will revert to the menu scroll.**
(Exception to this is with “Signal Output Check” mode.)

5.3.2 Operator Interface

The operating interface is menu-driven via the two magnetic program switches located under the target marks of the sensor housing. The two switches are referred to as “PGM1” and “PGM2”. The menu list consists of three major items that include sub-menus as indicated below. (Refer to the complete Software Flow Chart.)

Normal Operation

Current Reading and Fault Status

Calibration Mode

AutoZero
AutoSpan

Program Mode

View Sensor Status
- Sensor Model Type
- Current Software Version
- Gas Type
- Range of Detection
- Serial ID address
- AutoSpan Level
- Days From Last AutoSpan
- Remaining Sensor Life
- Gas Factor
- Raw Active Counts
- Raw Reference Counts
- 4-20mA Output
- Input Voltage Supply
- Sensor Temperature

Set AutoSpan Level
Set Gas Type & Range
Set Gas Factor
Set Serial ID
Set Sensor Gain
Signal Output Check
Restore Default Settings

Software Flowchart

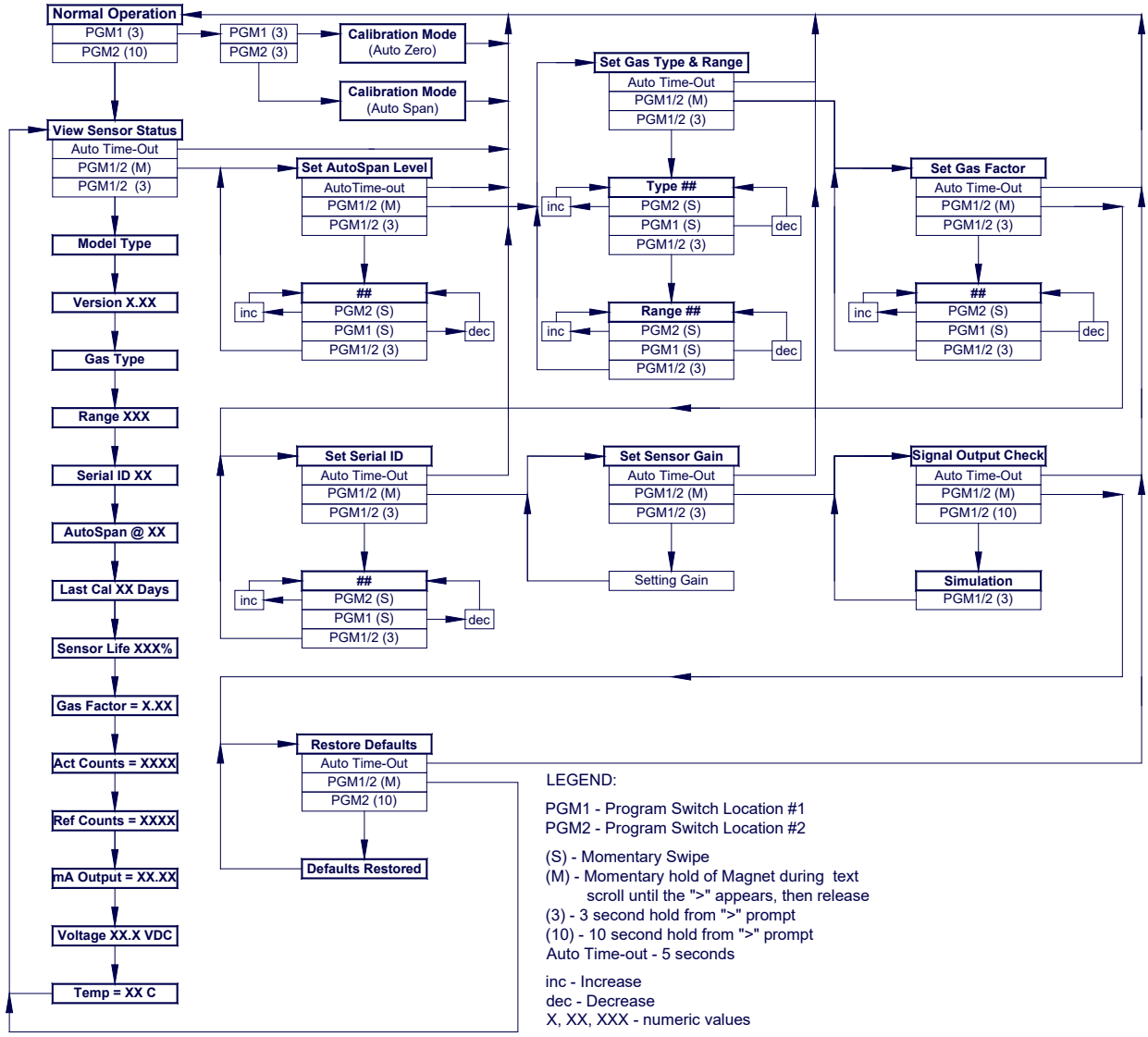

Figure 28 IR-700 Software Flowchart

5.3.3 Normal Operation

In normal operation, the ITM Display continuously shows the current sensor reading, which will normally appear as “0”. Once every 60 seconds the LED display will flash the sensor’s measurement units and gas type (i.e. % LEL). If the sensor is actively experiencing any diagnostic faults, a “Fault Detected” message will flash on the ITM display once every minute. When the unit is in “Fault Detected” mode, PGM1 or PGM2 can be swiped to prompt the sensor to display the list of the active faults.

In normal operation, the 4-20mA current output corresponds with the present gas concentration and full-scale range. The RS-485 Modbus™ serial output provides the current gas reading and fault status on a continuous basis when polled.

Caution: Off-scale readings may indicate a flammable concentration of gas.

5.3.4 Calibration Mode (AutoZero and AutoSpan)

5.3.4.1 AutoZero

The AutoZero function is used to set the sensor's zero baseline. Local ambient air can be used to zero calibrate the sensor as long as it can be confirmed that it contains no combustible hydrocarbon gases. If this cannot be confirmed then a zero air or pure N2 cylinder should be used. The same AutoZero procedure applies for the CO2 version sensor.

Material Requirements:

- Detcon PN 327-000000-000 MicroSafe™ Programming Magnet
- Detcon PN 613-120000-700 700 Series Splash Guard with integral Cal Port and Calibration Wind Guard (P/N 943-000000-000) -OR-
- Detcon PN 943-000006-132 Threaded Calibration Adapter
- Detcon PN 942-001123-000 Zero Air (or N2) cal gas, or use ambient air if no combustible gas is present.

a) If the ambient air is known to contain no combustible hydrocarbon gas content, it can be used to calibrate zero. If a zero air or N2 gas cal cylinder is going to be used then attach the calibration adapter and set flow rate of 200 cc/min and let sensor purge for 1-2 minutes before executing the AutoZero.

b) From Normal Operation, enter Calibration Mode by holding the programming magnet over PGM1 for 3 seconds. Note, the "➔" prompt will show that the magnetic switch is activated during the 3 second hold period. The display will then scroll "PGM1=Zero …PGM2=Span". Hold the programming magnet over PGM1 for 3 seconds once the "➔" prompt appears to execute AutoZero (or allow to timeout in 5 seconds if AutoZero is not desired).

NOTE 1: Upon entering Calibration Mode, the 4-20mA signal drops to 2mA and is held at this level until the program returns to normal operation. Modbus™ Status Register bit 14 is also set to signify when the sensor is in-calibration mode.

NOTE 2: The Calibration Wind Guard must be used when the Splashguard Adapter with integral Cal Port is used. Failure to use the Calibration Wind Guard may result in an inaccurate AutoZero calibration.

c) The ITM will display the following sequence of text messages as it proceeds through the AutoZero sequence: *Zero Cal. . .Setting Zero. . . Zero Saved (each will scroll twice)*

d) Remove the zero gas and calibration adapter, if applicable.

5.3.4.2 AutoSpan

The AutoSpan function is used to span calibrate the sensor. Span adjustment is recommended at 50% of range for LEL and CO_2 sensors. Follow the same procedure for both. The gas Factor Table (Section 5.3.5.4, Table 6) should be used for Methane and for Heavy Hydrocarbon gas.

NOTE: Before performing AutoSpan Calibration, verify that the AutoSpan level matches the span calibration gas concentration as described in Section 5.3.5.2.

Material Requirements:

- Detcon PN 327-000000-000 MicroSafe™ Programming Magnet
- Detcon PN 613-120000-700 700 Series Splash Guard with integral Cal Port and Calibration Wind Guard (P/N 943-000000-000) -OR-
- Detcon PN 943-000006-132 Threaded Calibration Adapter
- Detcon PN 942-520124-050 50% LEL Methane in balance air (recommended for 0-100% LEL range), or
- Detcon PN 942-520124-025 25% LEL Methane in balance air (recommended for 0-50% LEL range), or other suitable span gas containing a certified level of % LEL concentration of common combustible hydrocarbon gas.

NOTE 1: If the span gas is different from the measured target gas, remember to use the appropriate Gas Factor as described in Section 5.3.5.4.

NOTE 2: The Calibration Wind Guard must be used when the Splashguard Adapter with integral Cal Port is used. Failure to use the Calibration Wind Guard may result in an inaccurate AutoSpan calibration.

CAUTION: Verification that the calibration gas level setting matches the calibration span gas concentration is required before executing "AutoSpan" calibration. These two numbers must be equal.

AutoSpan consists of entering Calibration Mode and following the menu-displayed instructions. The display will ask for the application of span gas in a specific concentration. This concentration must be equal to the calibration gas level setting. The factory default setting and recommendation for span gas concentration is 50% of the sensor's range. If a span gas containing the recommended concentration is not available, other concentrations may be used as long as they fall between 5% and 95% of the sensor's range. However, any alternate span gas concentration value must be programmed via the "Set AutoSpan Level" menu before proceeding with AutoSpan calibration. Follow the instructions "a" through "e" below for AutoSpan calibration.

a) Verify that the AutoSpan Level is equal to the calibration span gas concentration. (Refer to View Sensor Status in Section 5.3.5.1.) If the AutoSpan Level is not equal to the calibration span gas concentration, adjust the AutoSpan Level as instructed in Section 5.3.5.2.

b) From Normal Operation, enter Calibration Mode by holding the programming magnet over PGM1 for 3 seconds. Note, the "➔" prompt will show that the magnetic switch is activated during the 3 second hold period. The display will then scroll "PGM1=Zero . . . PGM2=Span". Hold the programming magnet over PGM2 for 3 seconds to execute AutoSpan (or allow to timeout in 5 seconds if AutoSpan is not intended). The ITM will then scroll "Apply XX %LEL Gas" (where XX is the AutoSpan Level).

NOTE: Upon entering Calibration Mode, the 4-20mA signal drops to 2mA and is held at this level until the program returns to normal operation. Modbus™ Status Register bit 14 is also set to signify when the sensor is in-calibration mode.

c) Apply the span calibration test gas at a flow rate of 200cc/min. As the sensor signal begins to increase the display will switch to reporting a flashing "XX" reading as the ITM shows the sensor's "as found" response to the span gas presented. If it fails to meet the minimum in-range signal change criteria within 2½ minutes, the display will report "Range Fault" twice and the ITM will return to normal operation, aborting the AutoSpan sequence. The ITM will continue to report a "Range Fault" and will not clear the fault until a successful AutoSpan is completed.

Assuming acceptable sensor signal change, after 1 minute the reading will auto-adjust to the programmed AutoSpan level. During the next 30 seconds, the AutoSpan sequence checks the sensor for acceptable reading stability. If the sensor fails the stability check, the reading is re-adjusted back to the AutoSpan level and the cycle repeats until the stability check is passed. Up to three additional 30-second stability check periods are allowed before the unit reports a "Stability Fault" twice and the ITM will return to normal operation, aborting the AutoSpan sequence. The ITM will continue to report a "Stability Fault" and will not clear the fault until a successful AutoSpan is completed.

If the sensor passes the stability check, the ITM reports a series of messages:

"**AutoSpan Complete**"
"**Sensor Life XXX%**"
"**Remove Span Gas**"

d) Remove the span gas and calibration adapter. The ITM will report a live reading that alternates with "**Remove Gas**" message as it clears toward "0". When the reading clears below 5 % LEL, the ITM will display "Span Complete" and will revert to normal operation. If the sensor fails to clear to less than 5 % LEL in less than 5 minutes, a "**Clearing Fault**" will be reported twice and the ITM will return to normal operation, aborting the AutoSpan sequence. The ITM will continue to report a "**Clearing Fault**" and will not clear the fault until a successful AutoSpan is completed.

NOTE 1: If the sensor fails the minimum signal change criteria, a **"Range Fault"** will be declared and a "Fault Detected" message will be displayed alternately with the sensor's current reading. The 4-20 output will be taken to 0mA and the "Range Fault" fault bit will be set on the Modbus output.

NOTE 2: If the sensor fails the stability criteria, a **"Stability Fault"** will be declared and a "Fault Detected" message will be displayed alternately with the sensor's current reading. The 4-20mA output will be taken to 0mA and the "Stability Fault" fault bit will be set on the Modbus output.

NOTE 3: If the sensor fails the clearing time criteria, a "**Clearing Fault**" will be declared and a **"**Fault Detected" message will be displayed alternately with the sensor's current reading. The 4-20 output will be taken to 0mA and the "Clearing Fault" fault bit will be set on the Modbus output.

5.3.5 Program Mode

Program Mode provides a View Sensor Status menu to check operational and configuration parameters. Program Mode also provides for adjustment of the AutoSpan Level, Gas Factor, Gas Type and Range, and Serial ID. Additionally, it includes the Set Sensor Gain, Restore Factory Defaults, and Signal Output Check diagnostic functions.

The Program Mode menu items appear in the order presented below:

View Sensor Status

Set AutoSpan Level

Set Gas Type and Range

Set Gas Factor

Set Serial ID

Set Sensor Gain

Signal Output Check

Restore Defaults

Navigating Program Mode

From Normal Operation, enter Program Mode by holding the magnet over PGM2 for 10 seconds. Note, the "➔" prompt will show that the magnetic switch is activated during the 10 second hold period. The ITM will enter Program Mode and the display will scroll the first menu item "View Sensor Status". To advance to the next menu item, hold the magnet over PGM1 or PGM2 while the current menu item's text is scrolling. At the conclusion of the text scroll the "➔"prompt ("➔" for PGM2 or "➔" for PGM1) will appear, and immediately remove the magnet. The ITM will advance to the next menu item. Repeat this process until the desired menu item is displayed. Note, PGM1 moves the menu items from right to left and PGM2 moves the menu items from left to right.

To enter a menu item, hold the magnet over PGM1 or PGM2 while the menu item is scrolling. At the conclusion of the text scroll the "➔"prompt ("➔" for PGM2 or "➔" for PGM1) will appear, continue to hold the magnet over PGM1 or PGM2 for an additional 3-4 seconds to enter the selected menu item. If there is no magnet activity while the menu item text is scrolling (typically 4 repeated text scrolls), the ITM will automatically revert to Normal Operation.

5.3.5.1 View Sensor Status

View Sensor Status displays all current configuration and operational parameters including: sensor type, software version number, detection range, AutoSpan level, days since last AutoSpan, estimated remaining sensor life, gas factor, gas type, input voltage, 4-20 output, active counts, reference counts, and sensor ambient temperature.

From the **View Sensor Status** text scroll, hold the magnet over PGM1 or PGM2 until the "➔" prompt appears and continue to hold the magnet in place for an additional 3-4 seconds (until the display starts to scroll "Status Is"). The display will scroll the complete list of sensor status parameters sequentially:

Sensor Model Type

The menu item appears as: "Model IR-700"

Current Software Version

The menu item appears as: "Version 1.XX"

Gas Type

The menu item appears as: "Gas Type = CH4"

Range of Detection

The menu item appears as: "Range XXX"

Serial ID Address

The menu item appears as: "Serial ID XX"

AutoSpan Level.

The menu item appears as: "Auto Span Level XX"

Days From Last AutoSpan

The menu items appears as: "Last Cal XX days"

Remaining Sensor Life

The menu item appears as: “Sensor Life 100%”

Gas Factor

The menu item appears as: “Gas Factor = X.XX”

Raw Active Counts

The menu item appears as: “Active Counts XXXX”

Raw Reference Counts

The menu item appears as: “Reference Counts XXXX”

4-20mA Output

The menu item appears as: “mA Output X.XX mA”

Input Voltage Supply

The menu item appears as: “Voltage XX.X VDC”

Sensor Operating Temperature

The menu item appears as: “Temp XX C”

When the status list sequence is complete, the ITM will revert to the “View Sensor Status” text scroll. The user can either: 1) review list again by executing another 3-4 second hold, 2) move to another menu item by executing a momentary hold over PGM1 or PGM2, or 3) return to Normal Operation via automatic timeout of about 15 seconds (the display will scroll “View Sensor Status” 4 times and then return to Normal Operation).

5.3.5.2 Set AutoSpan Level

Set AutoSpan Level is used to set the span gas concentration level that is being used to calibrate the sensor. This level is adjustable from 5% to 95% of range (100% LEL range or CO2) or 2% to 50% (50% LEL range). The current setting can be viewed in View Program Status.

The menu item appears as: "**Set AutoSpan Level**".

From the **Set AutoSpan Level** text scroll, hold the magnet over PGM1 or PGM2 until the "➔" prompt appears and continue to hold the magnet in place for an additional 3-4 seconds (until the display starts to scroll "Set Level"). The display will switch to "XX"(where XX is the current gas level). Swipe the magnet momentarily over PGM2 to increase or PGM1 to decrease the AutoSpan Level until the correct level is displayed. When the correct level is achieved, hold the magnet over PGM1 or PGM2 for 3-4 seconds to accept the new value. The display will scroll "Level Saved", and revert to "Set AutoSpan Level" text scroll.

Move to another menu item by executing a momentary hold, or return to Normal Operation via automatic timeout of about 15 seconds (the display will scroll "Set AutoSpan Level" 4 times and then return to Normal Operation).

5.3.5.3 Set Gas Type & Range

The IR sensor has a slightly different linearization requirement for different groupings of target gases. The four groupings are 1) Methane (CH_4) and 2) Heavier Hydrocarbons (H HC) and 3) % by volume (%VOL) and 4) CO_2. The Set Gas Type menu function is a simple choice between these four gas type groupings.

NOTE: The default value for Gas Type is methane (CH_4).

NOTE: The gas type and range on the 0-50% LEL range version cannot be changed. When entering the Set Gas Type & Range menu, the sensor will display "Range is fixed".

The menu item appears as: "**Set Gas Type**".

From the **Set Gas Type & Range** text scroll, hold the magnet over PGM1 or PGM2 until the "➔" prompt appears and continue to hold the magnet in place for an additional 3-4 seconds (until the display starts to scroll "CH4 / H HC / %VOL / CO2"). Swipe the magnet momentarily over PGM2 or PGM1 to change the selection until the correct choice is displayed. Hold the magnet over PGM1 or PGM2 for 3 seconds to accept the new value. The display will scroll "Type Saved", then "Set Range" followed by the currently selected Range. Momentarily hold the magnet over PGM1 or PGM2 to change the Range Selection until the correct value is displayed. Hold the magnet over PGM1 or PGM2 for 3 seconds to accept the new value.

NOTE 1: If a gas type of CH_4, HHC, or %VOL is selected the range can only be set to 100. If CO_2 gas type is selected range selections are 0.3, 0.5, 1, 3, 5, 10, 15, 20, 25, 50, and 100.

NOTE 2: For CO_2 there are two different plug-in IR sensors. One sensor is used for the ranges of 0.3, 0.5, 1, 3, and 5. The second is used for the rages of 10, 15, 20, 25, 50, and 100. These sensors cannot be mismatched.

Move to another menu item by executing a momentary hold, or, return to Normal Operation via automatic timeout of about 15 seconds (the display will scroll "Set Gas Type and Range" 4 times and then return to Normal Operation).

5.3.5.4 Set Gas Factor

Because of the IR sensor's almost universal response to combustible hydrocarbon gases, the IR-700 sensor can be configured and calibrated to detect any of the combustible gases listed in the Table 6 and others not shown. The detected gas is referred to as the "target gas" and the span calibration gas is referred to as the "cal gas". In cases where the cal gas is different from the target gas, the Set Gas Factor menu function is used to maintain accuracy. This feature allows for a significant degree of flexibility in the detection and span calibration process.

NOTE 1: The default value for Gas Factor is 1.0. This would be used when the target gas is the same as the cal gas. Values other than 1.0 would be used when the target gas is different from the cal gas.

NOTE 2: Table 2: Gas Factors can be used for both selections of "gas type = CH4" and "gas type = HHC-Heavy Hydrocarbons".

NOTE 3: The "Set Gas Factor" is not applicable for CO_2 versions and should be set to 1.0

Set Gas Factor is used to make the appropriate signal sensitivity adjustment when the target gas is different from the cal gas. This is necessary because the IR sensor has different signal strengths for each combustible hydrocarbon gas. The Gas Factor value is adjustable from 0.2 to 5.0. It represents the translation between the target gas and the cal gas when they are different.

To calculate the correct Gas Factor, refer to Table 2 and take the Gas Factor of the target gas and divide by the Gas Factor of the cal gas. The calculated value is the correct number to enter into the menu as the Gas Factor.

For example, if calibrating with methane when propane is the target gas, the correct Gas Factor to enter would be 0.63/1.0 = 0.63.

For example, if calibrating with butane when ethane is the target gas, the correct Gas Factor to enter would be 0.38/0.72=0.53.

Table 6 shows the Gas Factors of most combustible hydrocarbon gases that will be measured. Find the gas of interest for the cal gas and the target gas and follow the above instruction. If there is a mixture of target gases, use a weighted approach to determine the correct Gas Factor. For example, if the target gas was 50% butane and 50% pentane and the cal gas was methane, the correct Gas Factor would be calculated and entered as ((0.5 x 0.77) + (0.5 x 0.77)) / 1.0 = 0.77.

Table 6 Gas Factors

Gas	Factor	Gas	Factor	Gas	Factor
Acetic Acid	2.00	Decane	1.53	Naphthalene	
Acetone	1.21	Ethyl Alcohol	0.35	n-Nonane	1.53
Benzene	1.00	Ethane	0.38	n-Octane	1.34
1,3-Butadiene	1.80	Ethyl Benzene	1.07	n-Pentane	0.77
Butane	0.77	Ethylene	2.39	Propane	0.63
Iso-Butane	0.72	n-Heptane	0.98	iso-Propyl Alcohol	0.54
Butene-1	0.67	n-Hexane	1.00	Propylene	0.80
n-Butyl Alcohol	0.63	Dimethyl Ether	0.40	Toluene	1.00
iso-Butyl Alcohol	0.63	Methane	1.00	Vinyl Acetate	1.43
Cyclohexane	0.89	Methanol	0.41	Vinyl Chloride	
Cyclopropane	0.45	Methyl Ethyl Ketone	0.77	Xylene	1.00

The menu item appears as: "**Set Gas Factor**".

From the **Set Gas Factor** text scroll, hold the magnet over PGM1 or PGM2 until the "➔" prompt appears and continue to hold the magnet in place for an additional 3-4 seconds (until the display starts to scroll "Set Factor"). The display will then switch to "X.XX"(where X.XX is the current gas factor). Swipe the magnet momentarily over PGM2 to increase or PGM1 to decrease the gas factor level until the correct value is displayed. Hold the magnet over PGM1 or PGM2 for 3 seconds to accept the new value. The display will scroll "Factor Saved", and revert to "Set Gas Factor" text scroll.

Move to another menu item by executing a momentary hold, or, return to Normal Operation via automatic timeout of about 15 seconds (the display will scroll "Set Gas Factor" 4 times and then return to Normal Operation).

5.3.5.5 Set Serial ID

Detcon Model IR-700 sensors can be polled serially via RS-485 Modbus™ RTU. Refer to Section 5.4for details on using the Modbus output feature.

Set Serial ID is used to set the Modbus serial ID address. It is adjustable from 01 to 256 in hexadecimal format (01-FF hex). The current serial ID can be viewed in View Sensor Status using the instruction given in Section 5.3.5.1.

The menu item appears as: "**Set Serial ID**".

From the "**Set Serial ID"** text scroll, hold the programming magnet over PGM1 or PGM2 until the "➔" prompt appears and continue to hold the magnet in place for an additional 3-4 seconds (until the display starts to scroll "Set ID"). The display will then switch to "XX"(where XX is the current ID address). Swipe the magnet momentarily over PGM2 to increase or PGM1 to decrease the hexadecimal number until the desired ID is displayed. Hold the magnet over PGM1 or PGM2 for 3-4 seconds to accept the new value. The display will scroll "ID Saved", and revert to "Set Serial ID" text scroll.

Move to another menu item by executing a momentary hold, or, return to Normal Operation via automatic timeout of about 15 seconds (the display will scroll "Set Serial ID" 5 times and then return to Normal Operation).

5.3.5.6 Set Sensor Gain

Each Detcon IR-700 combustible hydrocarbon gas sensor requires a one-time gain setting to match the plug-in IR sensor with the ITM electronics. This is set automatically during the "Set Sensor Gain" sequence. The "Set Sensor Gain" sequence determines the required gain resistance setting for optimal operation. This technique provides for uniformity in sensor-to-sensor operational performance.

NOTE: The "Set Sensor Gain" function is executed during factory calibration of every IR-700 sensor. In the field, this menu item is only needed when a replacement plug-in IR sensor is being installed, or when mating a new IR-700 ITM with an existing plug-in sensor. It is also required if the Restore Defaults menu item is executed.

The menu item appears as: "**Set Sensor Gain**".

From the **Set Sensor Gain** text scroll, hold the magnet over PGM1 or PGM2 until the "➔" prompt appears and then hold continuously for an additional 3 seconds. The display will scroll "Setting Gain" and then show the count-up of the gain settings for the active and reference detectors. The typical final values are A = 9 and R = 37. At conclusion, the ITM will display "Gain Complete" and revert to "Set Sensor Gain" text scroll.

The user can then choose to either: 1) move to another menu item by executing a momentary hold, or 2) return to Normal Operation via 5 second automatic timeout.

5.3.5.7 Signal Output Check

Signal Output Check provides a simulated 4-20mA output and RS-485 Modbus™ output. This simulation allows the user to conveniently perform a functional system check of their entire safety system. This signal output simulation also aids the user in performing troubleshooting of signal wiring problems.

The menu item appears as: "**Signal Output Check**".

From the "Signal Output Check" text scroll, hold the magnet over PGM1 or PGM2 until the "➔" prompt appears and then hold continuously for an additional 10 seconds. Once initiated, the display will scroll "Simulation Active" until the function is stopped. During simulation mode, the 4-20mA value will be increased from 4.0mA to 20.0mA (in 1% of range increments at about a 1 second update rate) and then decreased from 20.0mA to 4.0mA. The same simulation sequence is applied to the Modbus™ output gas reading.

NOTE: Signal Output Check stays active indefinitely until the user stops the function. There is no automatic timeout for this feature.

To end simulation mode, hold magnet over PGM1 or PGM2 for 3 seconds. The display will either move to the prior menu item or move to the next menu item respectively.

Move to another menu item by executing a momentary hold, or, return to Normal Operation via automatic timeout of about 15 seconds.

5.3.5.8 Restore Factory Defaults

Restore Factory Defaults is used to clear current user configuration and calibration data from memory and revert to factory default values. This may be required if the settings have been configured improperly and a known reference point needs to be re-established to correct the problem.

This menu item appears as: "**Restore Defaults**".

NOTE: "Restoring Factory Defaults" should only be used when absolutely necessary. All previously existing configurational inputs will have to be re-entered if this function is executed. A full 10-second magnet hold on PGM 2 is required to execute this function.

From the "Restore Defaults" text scroll, hold the programming magnet over PGM2 until the "➔" prompt appears and continue to hold 10 seconds. The display will scroll "Restoring Defaults", and then will revert to the "Restore Defaults" text scroll.

Move to another menu item by executing a momentary hold, or, return to Normal Operation via automatic timeout of about 15 seconds (the display will scroll "Restore Defaults" 4 times and then return to Normal Operation).

Following the execution of "**Restore Defaults**", the IR-700 will revert to its factory default settings. The default settings are:

- Serial ID = 01. The Serial ID must be set appropriately by the operator (Section 5.3.5.5).

NOTE: The following must be performed in order before the sensor can be placed in operation.

- AutoSpan Level = 50 %LEL. AutoSpan level must be set appropriately by the operator (Section 5.3.5.2).
- Gas Type = CH4. The Gas Type must be set appropriately by the operator (Section 5.3.5.3).
- Gas Factor = 1.0. The Cal Factor must be set appropriately by the operator (Section 5.3.5.4).
- Sensor Gain: Sensor gain settings are lost. Sensor Gain must be performed (Section 5.3.5.6).
- AutoZero: AutoZero Calibration Settings are lost. AutoZero must be performed (Section 5.3.4).
- AutoSpan: AutoSpan Calibration Settings are lost. AutoSpan must be performed (Section 5.3.4).

5.3.6 Program Features

Detcon IR-700 gas sensors incorporate a comprehensive set of diagnostic features to achieve Fail-Safe Operation. These Operational features and Failsafe Diagnostic features are detailed below.

5.3.6.1 Operational Features

Over-Range

When gas greater than the full-scale range is detected, the ITM display will continuously flash the full-scale reading of 100. This designates an over-range condition. The 4-20mA signal will report a 22mA output during this time.

Negative Drift

In cases where the sensor may drift negative, the display will show a negative reading between 5% and 10% of the sensors full scale range. I.E., if a 0-100ppm sensor drifts to negative 6 the display will indicate -6. In cases where the full scale range of the sensor is less than 10ppm, due to the limited space on the display, the decimal point will be displayed as an asterisk (*) to denote a negative reading. I.E., if a 0-5ppm sensor drifts to negative 0.32 the display will show 0*32.

In-Calibration Status

When the sensor is engaged in AutoZero or AutoSpan calibration, the 4-20mA output signal is taken to 2.0mA and the in-calibration Modbus™ Status Register bit 14 is set. This alerts the user that the ITM is not in an active measurement mode. This feature also allows the user to log the AutoZero and AutoSpan events via their master control system.

Sensor Life

Sensor Life is calculated after each AutoSpan calibration and is reported as an indicator of remaining service life. It is reported in the “View Sensor Status” menu and as a RS-485 Modbus register bit. Sensor Life is reported on a scale of 0-100%. When Sensor Life falls below 25%, the sensor cell should be replaced within a reasonable maintenance schedule.

Last AutoSpan Date

This reports the number of days that have elapsed since the last successful AutoSpan. This is reported in the View Sensor Status menu.

5.3.6.2 Fault Diagnostic/Fail-Safe Features

Fail-Safe/Fault Supervision

Model IR-700 MicroSafe™ sensors are designed for Fail-Safe operation. If any of the diagnostic faults listed below are active, the ITM Display will scroll the message "Fault Detected" every 30 seconds during normal operation. At any time while the "Fault Detected" message is active, swipe the magnet over PGM1 or PGM2 to display the active fault(s). All active faults will then be reported sequentially.

Most fault conditions result in failed operation of the sensor and in those cases the 4-20mA signal is dropped to the universal fault level of 0mA. These include Zero Fault, AutoSpan Calibration Faults, Sensor Fault, Processor Fault, Memory Fault, Loop Fault, and Input Voltage Fault. The 0mA fault level is not employed for a Temperature Fault and AutoSpan Reminder Fault. For all diagnostic faults, the associated RS-485 Modbus™ fault register will be flagged to alert the user digitally.

NOTE 1: Refer to the Troubleshooting Guide section d for guidance on fault conditions.

NOTE 2: The 0mA fault level is not employed for a Temperature Fault and AutoSpan Reminder Fault.

Zero Fault

If the sensor drifts below –10% LEL, the "Zero Fault" will be declared. A "Zero Fault" will cause a "Fault Detected" message to scroll once a minute on the ITM display and drop the 4-20mA output to 0mA. The Modbus™ fault register bit for Zero Fault will be set and will not clear until the fault condition has been cleared. The sensor should be considered "Out-of-Service" until a successful AutoZero calibration is performed.

Range Fault – AutoSpan

If the sensor fails the minimum signal change criteria during AutoSpan sequence the "Range Fault" will be declared. A "Range Fault" will cause a "Fault Detected" message to scroll once a minute on the ITM display and drop the 4-20mA output to 0mA. The Modbus™ fault register bit for Range Fault will be set and will not clear until the fault condition has been cleared. The sensor should be considered "Out-of-Service" until a successful AutoSpan calibration is performed.

Stability Fault – AutoSpan

If the sensor fails the signal stability criteria during AutoSpan sequence the "Stability Fault" will be declared. A "Stability Fault" will cause a "Fault Detected" message to scroll once a minute on the ITM display and drop the milliamp output to 0mA. The Modbus™ fault register bit for Stability Fault will be set and will not clear until the fault condition has been cleared. The sensor should be considered as "Out-of-Service" until a successful AutoSpan calibration is performed.

Clearing Fault – AutoSpan

If the sensor fails the signal stability criteria during AutoSpan sequence the "Clearing Fault" will be declared. A "Clearing Fault" will cause a "Fault Detected" message to scroll once a minute on the ITM display and drop the milliamp output to 0mA. The Modbus™ fault register bit for Clearing Fault will be set and will not clear until the fault condition has been cleared. The sensor should be considered as "Out-of-Service" until a successful AutoSpan calibration is performed.

Sensor Fault

If the plug-in IR sensor, or the supporting electronics, fails to meet the required minimum or maximum working signal parameters a "Sensor Fault" will be declared. A "Sensor Fault" will cause a "Fault Detected" message to scroll once a minute on the ITM display. The Modbus™ fault register bit for Sensor Fault will be set and will not clear until the fault condition has been cleared. If a Sensor Fault occurs, the 4-20mA signal will be set at 0mA until the fault condition is resolved.

Processor Fault

If the detector has any unrecoverable run-time errors, a "Processor Fault" is declared. A "Processor Fault" will cause a "Fault Detected" message to scroll once a minute on the ITM display. The Modbus™ fault register bit for Processor Fault will be set and will not clear until the fault condition has been cleared. If a Processor Fault occurs, the 4-20mA signal will be set at 0mA until the fault condition is resolved.

Memory Fault

If the detector has a failure in saving new data to memory, a "Memory Fault" is declared. A "Memory Fault" will cause the "Fault Detected" message to scroll once a minute on the ITM display. The Modbus™ fault register bit for Memory Fault will be set and will not clear until the fault condition has been cleared. If a Memory Fault occurs, the 4-20mA signal will be set at 0mA until the fault condition is resolved.

4-20mA Loop Fault

If the sensor detects a condition where the 4-20mA output loop is not functional (high loop resistance or failed circuit function) a "4-20mA Fault" is declared. A "4-20mA Fault" will cause the "Fault Detected" message to scroll once a minute on the ITM display. The Modbus™ fault register bit for Loop Fault will be set and will not clear until the fault condition has been cleared. If a Loop Fault occurs, the 4-20mA signal will be set at 0mA until the fault condition is resolved. If the 4-20mA current loop is still out of tolerance, contact Detcon at Detcon-service@teledyne.com, or contact Detcon customer service.

NOTE: If the 4-20mA output is not being used, the Green wire from the sensor *must* be connected to the Black wire at the (-) terminal on the Transient Protection Module to ensure RS-485 communication is not disrupted by a 4-20mA Fault.

Input Voltage Fault

If the detector is currently receiving an input voltage that is outside of the 11.5-28 VDC range, an "Input Voltage Fault" is declared. An "Input Voltage Fault" will cause the "Fault Detected" message to scroll once a minute on the ITM display. The fault register bit for Input Voltage Fault will be set and will not clear until the fault condition has been cleared. If an Input Voltage Fault occurs, the 4-20mA signal will be set at 0mA until the fault condition is resolved.

Temperature Fault

If the detector is currently reporting an ambient temperature that is outside of the –40C° to +75C° range a "Temperature Fault" is declared. A "Temperature Fault" will cause the "Fault Detected" message to scroll once a minute on the ITM display. The Modbus™ fault register bit for Temperature Fault will be set and will not clear until the fault condition has been cleared. If a Temperature Fault occurs, the 4-20mA signal remains operational.

AutoSpan Reminder Fault

If 180 days has elapsed since the last successful AutoSpan, an AutoSpan Fault will be generated. An "AutoSpan Fault" will cause the "Fault Detected" message to scroll once a minute on the ITM display. The Modbus™ fault register bit for AutoSpan Reminder Fault will be set and will not clear until the fault condition has been cleared. If an AutoSpan Reminder Fault occurs, the 4-20mA signal remains operational.

5.4 RS-485 Modbus™ Protocol

Model DM-700 sensors feature Modbus™ compatible communications protocol and are addressable via the program mode. Other protocols are available. Contact the Detcon factory for specific protocol requirements. Communication is two wire, half duplex 485, 9600 baud, 8 data bits, 1 stop bit, no parity, with the sensor set up as a slave device. A master controller up to 4000 feet away can theoretically poll up to 256 different sensors. This number may not be realistic in harsh environments where noise and/or wiring conditions would make it impractical to place so many devices on the same pair of wires. If a multi-point system is being utilized, each sensor should be set for a different address. Typical address settings are: 01, 02, 03, 04, 05, 06, 07, 08, 09, 0A, 0B, 0C, 0D, 0E, 0F, 10, 11…etc.

Sensor RS-485 ID numbers are factory default to 01. These can be changed in the field via the Operator Interface described in Section 5.3.2.

The following section explains the details of the Modbus™ protocol that the DM-700 sensor supports.

Code 03 - Read Holding Registers is the only code supported by the transmitter. Each transmitter contains 6 holding registers which reflect its current status.

Table 7 Modbus™ Registers

FC	REG	Content Description	R/W	Content Definition		
				Value	**Meaning**	**Range**
03	40000	Device Type	R	8	700 Sensor	
03 06	40001 40001	Read Detectable Range[1,2] Write Detectable Range	R/W	100 10000	For 0-100 For 0-10000[2]	DM – 0 to 10000 FP – Read only TP – 20, 50, 100, 200 IR – 0 to 10000 PI – 0 to 10000
03	40002	Read Concentration[3,2]	R	1000	Bound by range. If > range, this value is in fault.	

FC	REG	Content Description	R/W	Content Definition		
				Value	**Meaning**	**Range**
03 06	40003 40003	Read AutoSpan Level[4,2] Write AutoSpan Level	R/W	50	Span gas at 50	DM – 1% to 95% of Range (40001) FP – 5% to 95% of Range (40001) TP – 2% to 50% of Range (40001) IR – 5% to 95% of Range (40001) PI – 1% to 95% of Range (40001)
03	40004	Read Sensor Life	R	85	For 85% sensor life	
03	40005	Read Fault Status Bits[5]	R	0x0001 0x0002 0x0004 0x0008 0x0010 0x0020 0x0040 0x0080 0x0100 0x0200 0x0400 0x0800 0x1000 0x2000 0x4000 0x8000	Global Fault Auto Span Fault Temperature Fault 4-20mA Fault Input Voltage Fault Memory Fault Processor Fault Clearing Fault Stability Fault Range Fault Sensor Fault Zero Fault Sensor Fault 2 <reserved> In Calibration Communication Error	
03	40006	Read Model #	R	1, 2, 3, 4, 5	DM, FP, IR, TP, PID respectively	
03	40007	Read Days Since Cal	R	29	29days	
03	40008	4-20 Current Output mA x100	R	400	4.00mA	**Range**
03	40009	Read Input Voltage V x100	R	2400	24.00V	
03	40010	Read Temperature	R	28	28 °C	

FC	REG	Content Description	R/W	Content Definition		
				Value	Meaning	Range
03/06	40011	Special #1	R/W		Function dependent on value of 40006 (See Special Register Table 4)	
03/06	40012	Special #2	R/W		Function dependent on value of 40006 (See Special Register Table 4)	
03	40013	Special #3	R		Function dependent on value of 40006 (See Special Register Table 4)	
03/06	40014	Special #4	R/W		Function defendant on value of 40006 (See Special Register Table 4)	
03	40015	Calibration Status	R	0x0000	Idle	
				0x0001	Zero Calibration Started	
				0x0002	Span Calibration Started	
				0x0003	Span Set	
				0x0004	Span Calibration Unsuccessful	
06	40015	Calibration Enable	W	0x0001	Set Zero	
				0x0002	Set Span	
				0x0008	Signal simulation mode	
				0x0009	Set FP Bridge Voltage	
				0x000A	Set TP Heater Power	
				0x000B	Set IR Gain	
03	40016	Read Text 1, first char in L	R		Two Char of Gas/Units String[6]	
03	40017	Read Text 2	R		Two Char of Gas/Units String[6]	
03	40018	Read Text 3	R		Two Char of Gas/Units String[6]	
03	40019	Read Text 4	R		Two Char of Gas/Units String[6]	
03	40020	Read Text 5, last char in H	R		Two Char of Gas/Units String[6]	
03	40021	Text null terminator in L	R		Two Char of Gas/Units String[6]	

Integer ranges from 1 all the way to 10,000.

[2] Units are determined by "units" field in the "notation" string

[3] Gas Reading times one *(x 1)* with units in notation string for "Low Range" = 0. Gas Reading times one *(x 10)* with units in notation string for "Low Range" = 1. Gas Reading times one *(x 100)* with units in notation string for "Low Range" = 2.

[4] Span Gas must be less than or equal to Detectable Range and is usually about ½ of it.

[5] Fault status bits self-reset when fault clears

[6] Text in ASCII, in order L byte, H byte, L byte… See field descriptions of notation string.

Gas/Units String

Character #	1	2	3	4	5	6	7	8	9	10	11
Description	Units			0x20	Gas Type						0x00

Units – This field is 'PPM', 'PPB', or '_ _ %' (where ' _ ' is a space, 0x20).

0x20 – The units filed is terminated with an ASCII space (0x20)

Gas Type – This field contains the gas type of the cell. Any ASCII string is permissible

0x00 – The notation string is terminated with an ASCII null character

Table 8 Modbus™ Special Registers

REG	DM (40006 = 1)		FP (40006 = 2)	IR (40006 = 3)	TP (40006 = 4)[1]	PI (40006 = 5)	
40011	Low Range= 0, 1, 2 0: Range >25 (0 decimal place) 1: Range 10-25 (1 decimal place) 2: Range <10 (2 decimal place)		Gas Factor **(R/W)** **Range = 79 to 565**	Gas Factor **(R/W)** **Range = 20 to 565**	Heater Power (mW) **(R/W)**	Low Range= 0, 1, 2 0: Range >25 1: Range 10-25 2: Range <10	
40012	0x8XXX 0x0XXX 0xX000 0xX096 0xX0C8 0xX12C	Positive Polarity Cell Negative Polarity Cell Bias = 0mV Bias = 150mV Bias = 200mV Bias = 300mV	Cal Factor **(R/W)** **Range = 79 to 565**	Active Counts	Heater Voltage (mV)	0x8XXX 0x0XXX 0xX000 0xX096 0xX0C8 0xX12C	Positive Polarity Cell Negative Polarity Cell Bias = 0mV Bias = 150mV Bias = 200mV Bias = 300mV
40013	Gain Code (integer between 0 & 15)		Bridge Current (mA)	Reference Counts	Sensor Resistance (x100 Ω)	Gain Code	
40014	Raw Counts 0-0xFFFF (0x8000 = nominal 0)		Bridge Voltage (mV) **(Read only)**	Range Divisor 1,10,100, or 1000	Heater Current (mA)	Raw Counts	

Only possible ranges are 20, 50, 100, 200. Modbus register 40001 will contain either 20, 50, 100, or 200, range divisor is not necessary.

5.5 Service and Maintenance

5.5.1 Calibration Frequency

In most applications, quarterly to biannual zero and semi-annual to annual span calibration intervals will assure reliable detection. However, industrial environments differ. Upon initial installation and commissioning, close frequency tests should be performed, weekly to monthly. Test results should be recorded and reviewed to determine a suitable calibration interval.

5.5.2 Visual Inspection

The Sensor should be inspected annually. Inspect for signs of corrosion, pitting, and water damage. During visual inspection, the Splash Guard should be removed and inspected to insure that it is not blocked. Examine the porous 316SS flame arrestor within the sensor's bottom housing for signs of physical blockage or severe corrosion. Also, inspect inside the Junction Box for signs of water accumulation or Terminal Block corrosion.

5.5.3 Condensation Prevention Packet

A moisture condensation packet should be installed in every explosion proof Junction Box. The moisture condensation prevention packet will prevent the internal volume of the J-Box from condensing and accumulating moisture due to day-night humidity changes. This packet provides a critical function and should be replaced annually. Detcon's PN is 960-202200-000.

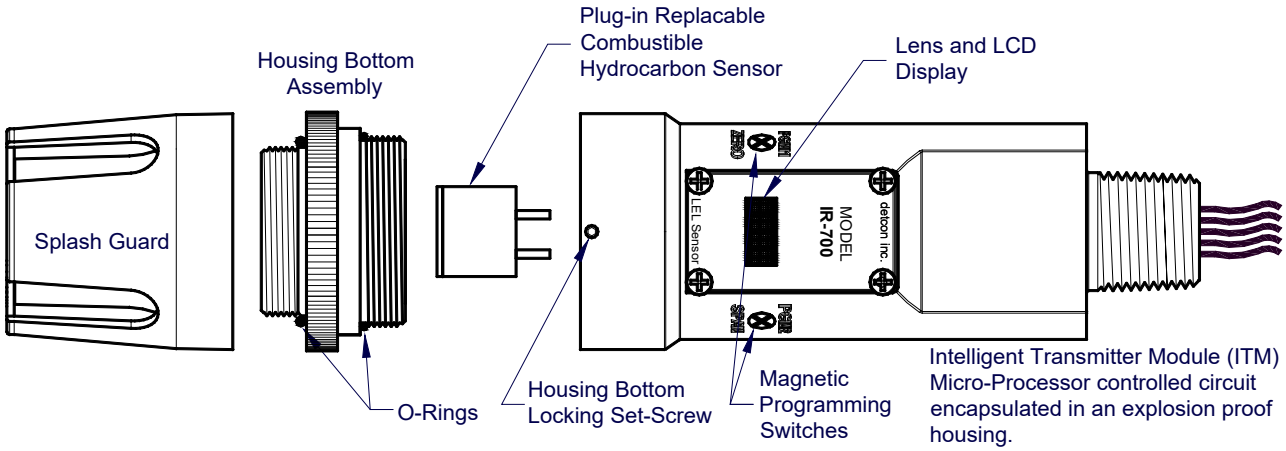

Figure 29 Sensor Assembly

5.5.4 Replacement of IR Plug-in Combustible Gas Sensor

a) Remove power to IR-700 sensor by lifting the + 24 VDC wire in J-Box.

NOTE: It is necessary to remove power while changing the plug-in combustible gas sensor in order to maintain area classification.

b) Use a M1.5 Allen wrench to release the locking setscrew that locks the ITM and bottom housing together (One turn will suffice – Do not remove setscrew completely).

c) Remove splashguard. Unthread and remove the Bottom Housing from the ITM.

d) Gently pull the plug-in IR combustible gas sensor out of the ITM. Orient the new plug in sensor so that it matches with the female connector pins. It may be necessary to look from below to assure alignment is correct. When properly aligned, press the sensor in firmly to make the proper connection.

e) Thread the Bottom Housing onto the ITM to a snug fit and tighten the locking setscrew using the M1.5 Allen wrench. Reinstall the splashguard.

f) With the new IR plug-in sensor physically installed, two functions are required to be performed:
   1) Perform the Set Sensor Gain function to match the new sensor with the ITM (Section 5.3.5.6).
   2) Perform a successful AutoZero and AutoSpan to match the new sensor with the ITM (Section 5.3.4).

5.5.5 Replacement of ITM

a) Disconnect all sensor wire connections at the J-Box after removing power source.

NOTE: It is necessary to remove power to the J-Box while changing the ITM in order to maintain area classification.

b) Use wrench and the wrench flats provided at the top section of the ITM and unthread until it can be removed.

c) Use a M1.5 Allen wrench to release the locking setscrew that locks the ITM and bottom housing together (One turn will suffice – Do not remove setscrew completely).

d) Remove splashguard. Unthread and remove the Bottom Housing from the ITM.

e) Gently pull the plug-in IR combustible gas sensor out of the ITM and set it aside along with the bottom housing and splashguard. Orient the plug in sensor so that it matches with the female connector pins on the new ITM and press, the sensor in firmly to make proper connection.

f) Thread the bottom housing onto the ITM until snug, tighten the locking setscrew and reconnect splashguard.

g) Feed the sensor assembly wires through the ¾" female NPT mounting hole and thread the assembly

into the J-box until tight and the ITM lens faces toward the front access point. Connect the sensor assembly wires inside J-Box (Refer to Section 5.2.6, and Figure 25).

h) Two functions are required to be performed on the new ITM:

i) Perform the Set Sensor Gain function to match the new sensor with the ITM (Section 5.3.5.6).
ii) Perform a successful AutoZero and AutoSpan to match the new sensor with the ITM (Section 5.3.4).

5.5.6 Replacement of IR-700 Sensor Assembly

a) Disconnect all sensor wire connections at the J-Box, after removing power source.

NOTE: It is necessary to remove power to the J-Box while changing the IR-700 sensor in order to maintain area classification.

b) Use wrench and the wrench flats provided at the top section of the sensor and unthread until it can be removed.

c) Feed the new IR-700 sensor assembly wires through the ¾" female NPT mounting hole and thread the assembly into the J-box until tight and the ITM lens faces toward the front access point. Connect the sensor assembly wires inside J-Box (Refer to Section 5.2.6, and Figure 25).

d) IR-700 sensors are factory calibrated. However, they will require an initial AutoZero and AutoSpan (Section 5.3.4). They must also be configured per customer specific application requirements.

5.6 Troubleshooting Guide

Refer to the list of Failsafe Diagnostic features listed in Section 5.3.6.2 for additional reference in troubleshooting activities. Listed below are some typical trouble conditions and their probable cause and resolution path.

Zero Fault

- Probable Cause: Sensor Zero has drifted to <-10% LEL.
- Redo AutoZero.
- Replace the plug-in IR sensor if problem persists.

Sensor Fault

Probable Causes: Plug-in sensor has failed.

- Recycle power to see if fault clears.
- Check "View Sensor Status" for a report of Active and Reference Counts (active and reference counts should be about 3000 with no gas applied).
- Perform Set Sensor Gain and note count values for Ag and Rg (Ag should be 7-11 and Rg should be 33-43).
- Replace the plug-in IR sensor.
- If problem persists with new plug-in sensor, replace ITM.

AutoSpan Calibration Faults – (Range, Stability, and Clearing)

- To clear any AutoSpan Calibration fault, the AutoSpan process must be completed successfully.

Range Fault

Probable Causes: Cal Gas not applied or not applied at appropriate time, Failed Sensor, Problems w/ cal gas and delivery

- Perform AutoSpan following the instructions explicitly.
- Check that cal gas value matches the AutoSpan level.
- If using Splashguard with Integral Cal Port, must use Calibration Wind Guard or air movement can compromise span gas delivery.
- Verify correct Gas Type and Gas Factor is entered.
- Check validity of span gas and flow rate (check MFG date on cal cylinder).
- Check for obstructions through stainless steel sinter element (including being wet).
- Replace the plug-in IR sensor, and/or bottom housing.

Stability Fault

Probable Causes: Failed Sensor, empty or close to empty Cal Gas Cylinder or problems with cal gas and delivery

- Perform AutoSpan following the instructions explicitly.
- Check that cal gas value matches the AutoSpan level.
- If using Splashguard with Integral Cal Port, must use Calibration Wind Guard or air movement can compromise span gas delivery.
- Verify correct Gas Type and Gas Factor is entered.
- Check validity of span gas and flow rate (check MFG date on cal cylinder).
- Check for obstructions through stainless steel sinter element (including being wet).
- Replace the plug-in IR sensor, and/or bottom housing.

Clearing Fault

Probable Causes: Failed Sensor, Cal Gas not removed at appropriate time, problems with cal gas and delivery, or Background combustible gases preventing clearing

- Perform AutoSpan following the instructions explicitly.
- Remove calibration adapter and gas connections.
- Confirm no combustible gasses in background.
- Check validity of span gas and flow rate (check MFG date on cal cylinder).
- Check for obstructions through stainless steel sinter element (including being wet).
- Replace the plug-in IR sensor, and/or bottom housing.

Poor Calibration Repeatability

Probable Causes: Failed Sensor, use of wrong Cal Gas, problems w/ cal gas and delivery, Sensor Corrosion

- Check for adequate Sensor Life.
- Increase calibration frequency to quarterly.
- Verify correct Gas Type and Gas Factor is entered.
- Check validity of span gas and flow rate (check MFG date on cal cylinder).
- Check for obstructions through stainless steel sinter element (including being wet).
- Replace the plug-in IR sensor, and/or bottom housing.

Unstable Output/ Sudden spiking

Possible Causes: Unstable power supply, inadequate grounding, or inadequate RFI protection

- Verify Power source is stable.
- Verify field wiring is properly shielded and grounded.
- Contact Detcon to optimize shielding and grounding.
- Add Detcon's RFI Protection Circuit accessory.

Nuisance Alarms

- Check condulet for accumulated water and abnormal corrosion on terminal blocks.
- If nuisance alarms are happening at night, suspect condensation in condulet.
- Add or replace Detcon's Condensation Prevention Packet P/N 960-202200-000.
- Investigate presence of other combustible hydrocarbon gases that may be causing sensor response.

Processor and/or Memory Faults

- Recycle power in attempt to clear problem
- Restore Factory Defaults – This will clear the processor's memory and may correct problem.
- Remember to re-enter all customer settings for cal gas level, set gain, Serial ID after Restore Factory Defaults.
- If problem persists, replace the Intelligent Transmitter Module.

Unreadable Display

- If due to excessive sunlight, install a sunshade to reduce glare.

Nothing Displayed – Transmitter not Responding

- Verify condulet has no accumulated water or abnormal corrosion.
- Verify required DC power is applied to correct terminals.
- Swap with a known-good ITM to determine if ITM is faulty.

Faulty 4-20mA Output

If Sensor has a normal reading with no Faults displayed, and the 4-20 mA signal output is 0mA….

- Check that wiring is properly connected at terminal blocks and through to controller inputs.
- The 4-20mA output loop must be closed to avoid a Loop Fault. If the 4-20mA output is not being used the green wire from the sensor must be connected to the (-) terminal on the Transient Protection Module to ensure that it does not create a 4-20mA Fault. (section5.2.6)
- Perform a "Signal Output Check" sequence via Section 5.3.5.7 and verify 4-20mA output with Current Meter.
- Swap with new ITM to determine if the ITM's 4-20mA output circuit has failed.
- If the 4-20mA current loop is still out of tolerance, contact Detcon at Detcon-service@teledyne.com, or contact Detcon customer service.

No Communication – RS-485 Modbus™

If unit has a normal reading with no Faults displayed and the Modbus™ is not communicating….

- Verify that the correct (and non-duplicated) serial address is entered (per Section 5.3.5.5).
- Check that wiring is properly connected at terminal blocks and through to controller inputs.
- Perform a "Signal Output Check" sequence via Section 5.3.5.7 and troubleshoot wiring.
- Swap with new ITM to determine if the ITM's serial output circuit is faulty.

5.7 Customer Support and Service Policy

Detcon
Shipping Address: 4055 Technology Forest Blvd., The Woodlands Texas 77381
Mailing Address: P.O. Box 8067, The Woodlands Texas 77387-8067
Phone: 713.559.9200

• www.teledynegasandflamedetection.com
• detcon-service@teledyne.com
• detcon-sales@teledyne.com

All Technical Service and Repair activities should be handled by the Detcon Service Department via phone or email at contact information given above. RMA numbers should be obtained from the Detcon Service Department prior to equipment being returned. For on-line technical service help, customers should have the model number/ part number, and serial number of product type in question.

All Sales activities (including spare parts purchase) should be handled by the Detcon Sales Department via phone or email at contact information given above.

Warranty Notice

Teledyne Detcon Inc. warrants the Model IR-700 gas sensor to be free from defects in workmanship of material under normal use and service for two years from the date of shipment on the ITM electronics and for a 5-year period on the plug-in IR combustible gas sensor and the IR CO_2 gas sensor. See Warranty details below.

Teledyne Detcon Inc. will repair or replace without charge any such equipment found to be defective during the warranty period. Full determination of the nature of, and responsibility for, defective or damaged equipment will be made by Teledyne Detcon Inc. personnel.

Defective or damaged equipment must be shipped to the Teledyne Detcon Inc. factory or representative from which the original shipment was made. In all cases, this warranty is limited to the cost of the equipment supplied by Teledyne Detcon Inc. The customer will assume all liability for the misuse of this equipment by its employees or other contracted personnel.

All warranties are contingent upon the proper use in the application for which the product was intended and does not cover products which have been modified or repaired without Teledyne Detcon Inc. approval, or which have been subjected to neglect, accident, improper installation or application, or on which the original identification marks have been removed or altered.

Except for the express warranty stated above, Teledyne Detcon Inc. disclaims all warranties with regard to the products sold. Including all implied warranties of merchantability and fitness and the express warranties stated herein are in lieu of all obligations or liabilities on the part of Teledyne Detcon Inc. for damages including, but not limited to, consequential damages arising out of, or in connection with, the performance of the product.

5.8 IR-700 Sensor Warranty

Plug-in IR Combustible Gas Sensor Warranty

Teledyne Detcon Inc. warrants, under normal intended use, each new plug-in IR combustible gas sensor **(PN 370-3658CH-700 for combustible, P/N 370-865878-700 for ≤5% CO_2, and P/N 370-287724-700 for ≥10% CO_2.)** for a five year period under the conditions described as follows: The warranty period begins on the date of shipment to the original purchaser and ends 5 years thereafter. The sensor element is warranted to be free of defects in material and workmanship. Should any sensor fail to perform in accordance with published specifications within the warranty period, return the defective part to Detcon, Inc., 4055 Technology Forest Blvd., The Woodlands, Texas 77381, for necessary repairs or replacement.

First Two Years: no charge

3rd year: 25% of replacement charge

4th year: 50% of replacement charge

5th year: 75% of replacement charge

Non-Warranty: 100% of replacement charge

Terms & Conditions

- The original serial number must be legible on each sensor element base.
- Shipping point is FOB the Detcon factory.
- Net payment is due within 30 days of invoice.
- Detcon, Inc. reserves the right to refund the original purchase price in lieu of sensor replacement.

ITM Electronics Warranty

Teledyne Detcon Inc. warrants, under intended normal use, each new Model 700 Intelligent Transmitter Module to be free from defects in material and workmanship for a period of two years from the date of shipment to the original purchaser. All warranties and service policies are FOB the Detcon facility located in The Woodlands, Texas.

Terms & Conditions

- The original serial number must be legible on each ITM.
- Shipping point is FOB the Detcon factory.
- Net payment is due within 30 days of invoice.
- Detcon, Inc. reserves the right to refund the original purchase price in lieu of ITM replacement.

5.9 Appendix

5.9.1 Specifications

Sensor Type:	Continuous diffusion/adsorption type NDIR Non-Dispersive Infrared Sub-miniature plug-in replaceable type
Sensor Life:	5 years typical
Measurement Range:	
Combustible	0-100% LEL, 0-50% LEL, 0-100% by volume (Combustible Gas)
CO_2	0-0.3/0.5/0-1/0-3/0-5 (low range version) 0-10/0-15/0-20/0-25/0-50/0-100 (high range version)
Accuracy:	
Combustible	± 2% (0-50% LEL); ± 5% (51-100%) LEL
CO_2	± 5% of Range
Repeatability (Short –Term):	± 2% of Range
Response Time:	
Combustible	T50 < 10 seconds, T90 < 30 seconds
CO_2	T50 < 15 seconds, T90 < 40 seconds
Zero Drift (Combustible):	≤2% per 2 years
Outputs:	Linear 4-20mA RS-485 Modbus™ RTU
Ingress Protection:	NEMA 4X, IP66
Safety Approvals:	$_{C}$CSA$_{US}$ Performance to ANSI/ISA12.13.01-2013 (60079-29-1) and CSA22.2 #152 (for combustible version only) CE Marking SIL2 FMEDA Rating
Warranty:	Plug-in detector – 2 years pro-rated Transmitter – 2 years

Environmental Specifications

Operating Temperature:	-40°F to +158F°; -40°C to +70°C
Storage Temperature:	-40°F to +167F°; -40°C to +75°C
Operating Humidity:	0-100% RH (Non-condensing)

Mechanical Specifications

Dimensions:	7"H x 2.2" Dia.; 178mmH x 65mm Dia. (sensor assembly only) 11"H x 6.1"W x 3.75"D; 280mmH x 155mmW x 96mmD (with junction box) Mounting holes (J-box) 5.5"; 140mm center to center
Weight:	2 lbs; 0.907kg (sensor only) 6 lbs; 2.72kg (w/aluminum j-box) 9 lbs; 4.08kg (w/stainless steel j-box)

Electrical Specifications

Power Input:	11-30VDC
Power Consumption:	Normal operation = 68mA (<1.7 watt) Maximum = 85mA (2 watts)
Inrush current:	0.67A @ 24V
RFI/EMI Protection:	Complies with EN50270:2015
Analog Output:	Linear 4-20mA DC current (1000 ohms maximum loop load @ 24VDC)

0mA	All Fault Diagnostics
2mA	In-Calibration
4-20mA	0-100% full-scale
22mA	Over-range condition

Serial Output:	RS-485 Modbus™ RTU
Baud Rate:	9600 BPS (9600,N, 8 ,1 Half Duplex)
Status Indicators:	4-digit LED Display with gas concentration, full-script menu prompts for AutoSpan, Set-up Options, and Fault Reporting
Faults Monitored:	Loop, Input Voltage, Zero, Sensor, Processor, Memory, Calibration
Cable Requirements:	Power/Analog: 3-wire shielded cable Maximum distance is 13,300 feet with 14 AWG Serial Output: 2-wire twisted-pair shielded cable specified for RS-485 use Maximum distance is 4,000 feet to last sensor
I/O Protection:	Over-Voltage, Miss-wiring, EMI/RFI Immunity

5.9.2 Spare Parts, Sensor Accessories, Calibration Equipment

Part Number	Spare Parts
927-215500-100	IR-700 Intelligent Transmitter Module (ITM)
602-003152-000	Model 700 Housing Bottom Assembly (includes Flame Arrestor)
370-3658CH-700	Replacement Plug-in IR Combustible Gas Sensor
370-865878-700	Replacement Plug-in CO_2 Sensor (Ranges ≤ 5%)
370-287724-700	Replacement Plug-in CO_2 Sensor (Ranges ≥10%)
500-003087-100	Transient Protection PCA
Sensor Accessories	
897-850800-000	NEMA 7 Aluminum Enclosure less cover – 3 port
897-850400-000	NEMA 7 Aluminum Enclosure Cover (Blank)
897-850801-316	NEMA 7 316SS Enclosure less cover – 3 port
897-850401-316	NEMA 7 316SS Enclosure Cover (Blank)
613-120000-700	Sensor Splashguard with integral Cal-Port
613-2R0000-000	Remote Calibration Adapter
943-002273-000	Harsh Environment Sensor guard
327-000000-000	Programming Magnet
960-202200-000	Condensation prevention packet (for J-Box replace annually)

Calibration Accessories	
943-000000-000	Calibration Wind Guard
943-000006-132	Threaded Calibration Adapter
943-020000-000	Span Gas Kit: Includes calibration adapter, In-Line Humidifying Tube, 200 cc/min fixed-flow regulator, and carrying case. (Does not include gas).
942-520124-050	Span Gas cylinder: 50% LEL Methane balance air Contains 104 liters of gas and is good for 175 calibrations
942-520124-025	Span Gas cylinder: 25% LEL Methane balance air Contains 104 liters of gas and is good for 175 calibrations
942-400123-XXX	Span Gas Cylinder with CO2 balance air. (XXX denotes % by volume concentration i.e. 10% = "-010")
943-090005-502	200 cc/min Fixed Flow Regulator for span gas bottle
Recommend Spare Parts for 2 Years	
927-215500-100	IR-700 Intelligent Transmitter Module (ITM)
602-003152-000	Housing Bottom Assembly (includes Flame Arrestor)
370-3658CH-700	Replacement Plug-in IR Combustible Gas Sensor
370-865878-700	Replacement Plug-in CO_2 Sensor (Ranges ≤ 5%)
370-287724-700	Replacement Plug-in CO_2 Sensor (Ranges ≥10%)
500-003087-100	Transient Protection PCA
960-202200-000	Condensation prevention packet (for J-Box replace annually)

6. Detcon Model DM-700

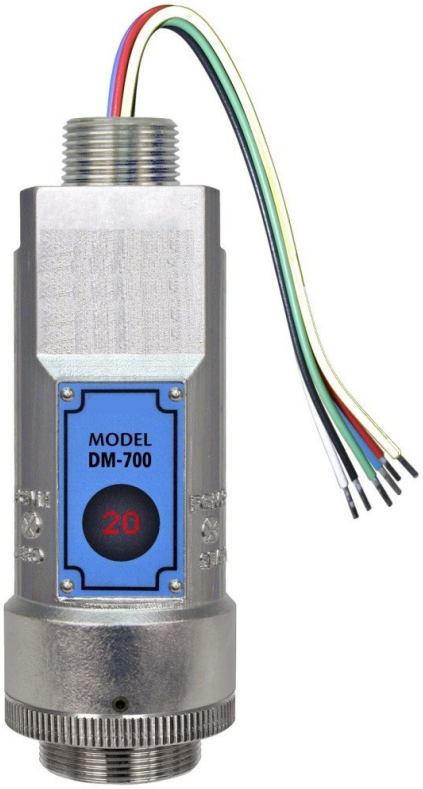

DM-700 Toxic Gas Sensors
DM-700 O_2 Deficiency Sensors

This manual covers all ranges of electrochemical and O_2 deficiency sensors offered in the Detcon Product Line

TELEDYNE DETCON

TELEDYNE DETCON, Inc.
4055 Technology Forest Blvd.,
The Woodlands, Texas 77381
Phone 713.559.9200

WWW.TELEDYNEGASANDFLAMEDETECTION.COM

6.1 Introduction

6.1.1 Description

Detcon Model DM-700 toxic gas and O_2 deficiency sensors are non-intrusive "Smart" sensors designed to detect and monitor a wide range of toxic gasses in air. Ranges of detection for toxic gasses are from 0-1ppm up to 0-10,000ppm. Ranges for O_2 deficiency are 0-100ppm up to 0-25% by volume. The sensor features an LED display of current reading, fault and calibration status. The Sensor is equipped with standard analog 4-20mA and Modbus™ RS-485 outputs. A primary feature of the sensor is its method of automatic calibration, which guides the user through each step via fully scripted instructions displayed on the LED display.

The microprocessor-supervised electronics are packaged in an encapsulated module and housed in an explosion proof casting, called the ITM (Intelligent Transmitter Module). The ITM includes a four character alpha/numeric LED used to display sensor readings, and the sensor's menu driven features when the hand-held programming magnet is used.

Electrochemical Sensor Technology

The Toxic gas sensors are based on electrochemical cells. Each cell consists of three electrodes embedded in an electrolyte solution all housed beneath a diffusion membrane. Sensitivity to specific target gasses is achieved by varying composition of any combination of the sensor components. Good specificity is achieved in each sensor type. The cells are diffusion limited via small capillary barriers resulting in a long service life of up to three or more years. The electrochemical cell is packaged as a field replaceable intelligent plug-in sensor.

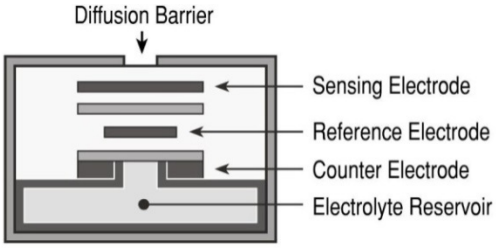

Figure 30 Construction of Electrochemical Toxic Sensor

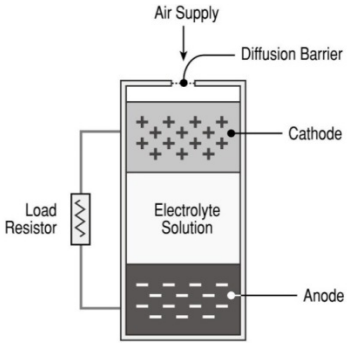

Figure 31 Construction of Galvanic Cell

The O_2 deficiency sensor technology is a two electrode galvanic metal air battery type cell, which is housed as a field replaceable intelligent plug–in sensor. The cell is diffusion limited and functions as a direct current generator proportional to the amount of oxygen adsorption. The sensors are temperature compensated and show good accuracy and stability over the operating temperature range of –20° to 50°C (-4° to +122° Fahrenheit). The sensor is warranted for two years and has an expected service life of up to 2.5 years in ambient air at 20.9% oxygen.

6.1.2 Sensor Electronics Design

Intelligent Transmitter Module

The DM-700 Intelligent Transmitter Module (ITM) is a fully encapsulated microprocessor-based package that is universal in design and will accept any Detcon intelligent plug-in electrochemical gas sensor. The ITM design uses an internal intrinsically safe barrier circuit that lifts the requirement for use of flame arrestors to achieve Class 1, Division 1 (Zone1) area classification. This facilitates fast response times and improved calibration repeatability on highly corrosive gas types. The ITM circuit functions include extensive I/O circuit protection, on-board power supplies, internal intrinsically safe barrier circuit, microprocessor, LED display, magnetic programming switches, a linear 4-20mA DC output, and a Modbus™ RS-485 output. Magnetic program switches located on either side of the LED Display are activated via a hand-held magnetic programming tool, thus allowing non-intrusive operator interface with the ITM. Calibration can be accomplished without declassifying the area. Electrical classifications are Class I, Division 1, Groups B C D, Class I, Zone 1, Group IIB+H_2, and II 2G Ex db ib IIB+H_2 Gb.

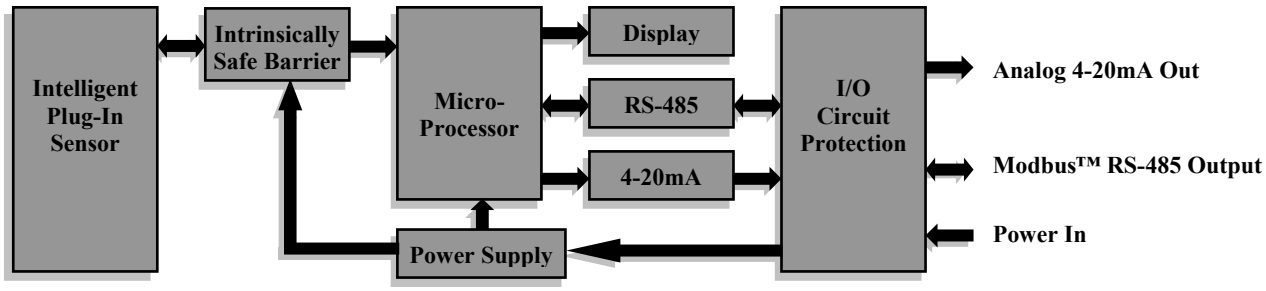

Figure 32 ITM Circuit Functional Block Diagram

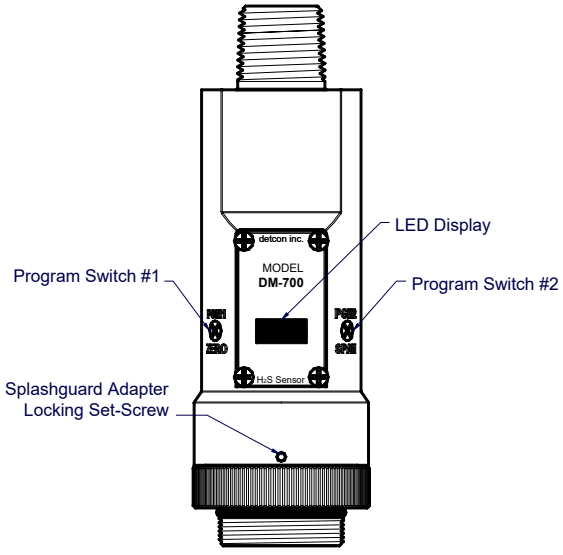

Figure 33 Sensor Assembly Front View

6.1.3 Modular Mechanical Design

The Model DM-700 Sensor Assembly is completely modular and is made up of four parts (See Figure 34):

9) DM-700 Intelligent Transmitter Module (ITM)
10) Intelligent Plug-in Sensor (varies by gas type and range)
11) Model DM-700 Splash Guard Adapter
12) Splash Guard.

NOTE: All metal components are constructed from electro polished 316 Stainless Steel in order to maximize corrosion resistance in harsh environments.

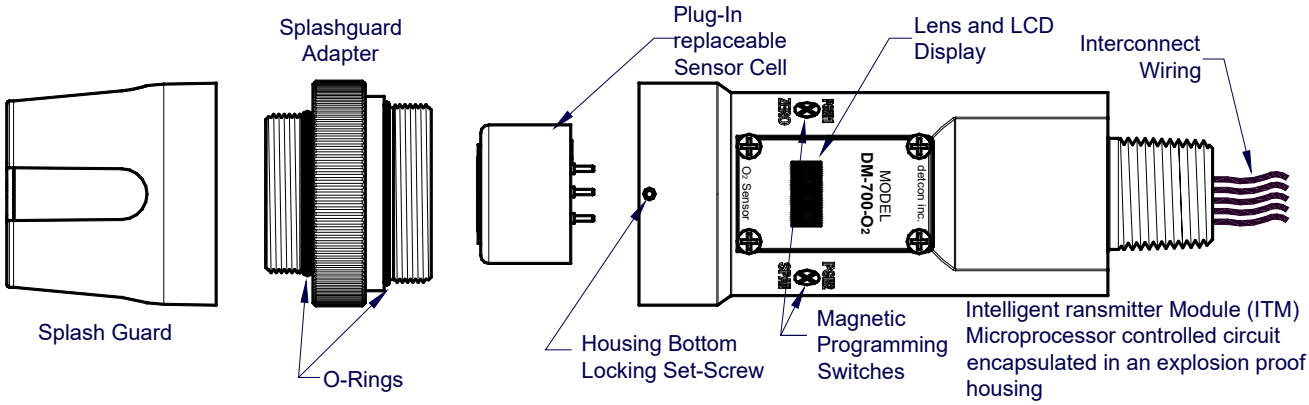

Figure 34 Sensor Assembly Breakaway

6.1.4 Intelligent Plug-in Electrochemical Gas Sensor

The Detcon family of electrochemical gas sensors are field proven, intelligent plug-in sensors with over-sized gold-plated connections that eliminate corrosion problems. The intelligent design provides automatic recognition of gas type, units, full-scale range, and calibrations data when a new sensor is plugged in. The sensor can be accessed and replaced in the field very easily by releasing the locking setscrew and unthreading the Splashguard Adapter. Detcon's family of toxic sensors have a long shelf life and are supported by an industry-leading warranty.

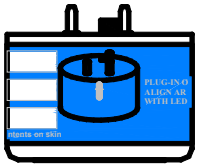

Figure 35 Intelligent Plug-in Sensor

6.2 Installation

6.2.1 ATEX Operational Guidelines for Safe Use

1. Ensure that the Housing Bottom and plug-in sensor are installed during operation. The Housing Bottom should be threaded tightly to the Intelligent Transmitter Module. The locking setscrew (M3.5 x 0.6 6g6h Stainless Steel Allen set screw cup point with yield strength of greater than 40,000 PSI, typical 80,000 PSI) should then be tightened down to keep the Housing Bottom from being inadvertently removed or from becoming loose under vibration. The locking setscrew ensures that Housing Bottom is only removable by authorized personnel with the use of special tools. A M1.5 Allen Wrench is required. If screw requires replacement, only an identical screw may be used.

2. Proper precautions should be taken during installation and maintenance to avoid the build-up of static charge on the plastic components of the sensor. This includes the splashguard.

3. The screws holding down the retaining plate label are special fasteners of type Stainless Steel, Phillips Pan-head Machine screw, M3 x 0.5 6g6h having yield strength of greater than 40,000 PSI, typical 80,000 PSI. If screw requires replacement, only an identical screw may be used.

4. Do not substitute components that are not authorized by the scope of the safety approval. This may impair the intrinsic safety rating.

5. Do not operate the sensor outside of the stated operating temperature limits.

6. Do not operate the sensor outside the stated operating limits for voltage supply.

7. The sensor power supply common (black wire) must be referenced to the metal enclosure body (ground) during installation.

8. These sensors have a maximum safe location voltage of Um=30V.

9. These sensors pass dielectric strength of 500VRMS between circuit and enclosure for a minimum of 1 minute at a maximum test current of 5mA.

6.2.2 Sensor Placement

Selection of sensor location is critical to the overall safe performance of the product. Six factors play an important role in selection of sensor locations:

(1) Density of the gas to be detected

(2) Most probable leak sources within the industrial process

(3) Ventilation or prevailing wind conditions

(4) Personnel exposure

(5) Maintenance access

(6) Additional placement considerations

Density

Placement of sensors relative to the density of the target gas is such that sensors for the detection of heavier than air gasses should be located within 4 feet of grade as these heavy gasses will tend to settle in low lying areas. For gasses lighter than air, sensor placement should be 4-8 feet above grade in open areas or in pitched areas of enclosed spaces.

Leak Sources

The most probable leak sources within an industrial process include flanges, valves, and tubing connections of the sealed type where seals may either fail or wear. Other leak sources are best determined by facility engineers with experience in similar processes.

Ventilation

Normal ventilation or prevailing wind conditions can dictate efficient location of gas sensors in a manner where the migration of gas clouds is quickly detected.

Personnel Exposure

The undetected migration of gas clouds should not be allowed to approach concentrated personnel areas such as control rooms, maintenance or warehouse buildings. A more general and applicable thought toward selecting sensor location is combining leak source and perimeter protection in the best possible configuration.

Maintenance Access

Consideration should be given to providing easy access for maintenance personnel. Consideration should also be given to the consequences of close proximity to contaminants that may foul the sensor prematurely.

NOTE: All installations of the gas sensor should point straight down (refer to Figure 36). Improper sensor orientation may result in false readings and permanent sensor damage.

Additional Placement Considerations

The sensor should not be positioned where it may be sprayed or coated with surface contaminating substances. Painting sensor assemblies is prohibited.

Although the sensor is designed to be RFI resistant, it should not be mounted in close proximity to high-powered radio transmitters or similar RFI generating equipment.

Mount in an area void of high wind, accumulating dust, rain or splashing from hose spray, direct steam releases, and continuous vibration. If the sensor cannot be mounted away from these conditions then make sure the Detcon Harsh Environment Splashguard accessory is used.

Do not mount in locations where temperatures will exceed the operating temperature limits of the sensor. Where direct sunlight leads to exceeding the high temperature-operating limit, use a sunshade to help reduce temperature.

6.2.3 Sensor Contaminants and Interference

Electrochemical toxic gas may be adversely affected by exposure to other airborne gasses. Depending on the cross-sensitivity relationship, there may be a positive or negative impact on the reading.

The most commonly present gasses that potentially cause interference problems are listed in Table 14 (refer to page 167).

The presence of cross-interference gasses in an area does not preclude the use of this sensor technology, although it is possible that the sensor could experience a false high or false low reading should exposure occur.

Cross-Interference Data Table

Table 14 (refer to page 167) lists the gasses typically found in industrial environments that may cause a cross-interference response on members of the Detcon family of toxic gas sensors. Review Table 14 on page 167 for the correct gas and then scan across the list for possible interference gasses. Determine the magnitude of cross-interference that may occur.

6.2.4 Mounting Installation

The DM-700 sensor assembly is designed to be threaded into a ¾" Female NPT fitting of a standard cast metal, Explosion-Proof Enclosure or Junction Box. There are two wrench flats on the upper section of the sensor that should be used to thread the sensor into the ¾" female NPT receiving connection. Thread the sensor up until tight (5 turns is typically expected) and until the display is pointed in the direction that sensor will normally be viewed and accessed.

The DM-700 should be vertically oriented so that the sensor points straight down. The explosion-proof enclosure or junction box would then typically be mounted on a wall or pole. Detcon provides a standard selection of junction boxes available as sensor accessories (See Figure 36 below). Any appropriately rated enclosure with a downward facing ¾" NPT female connection will suffice.

When mounting on a wall, it is recommended to use a 0.25"-0.5" spacer underneath the mounting ears of the Detcon standard J-Box to offset the sensor assembly from the wall and create open access around the sensor assembly. Spacing requirements for other junction boxes may vary.

When mounting on a pole, secure the Junction Box to a suitable mounting plate and attach the mounting plate to the pole using U-Bolts. (Pole-Mounting brackets for Detcon J-box accessories are available separately.)

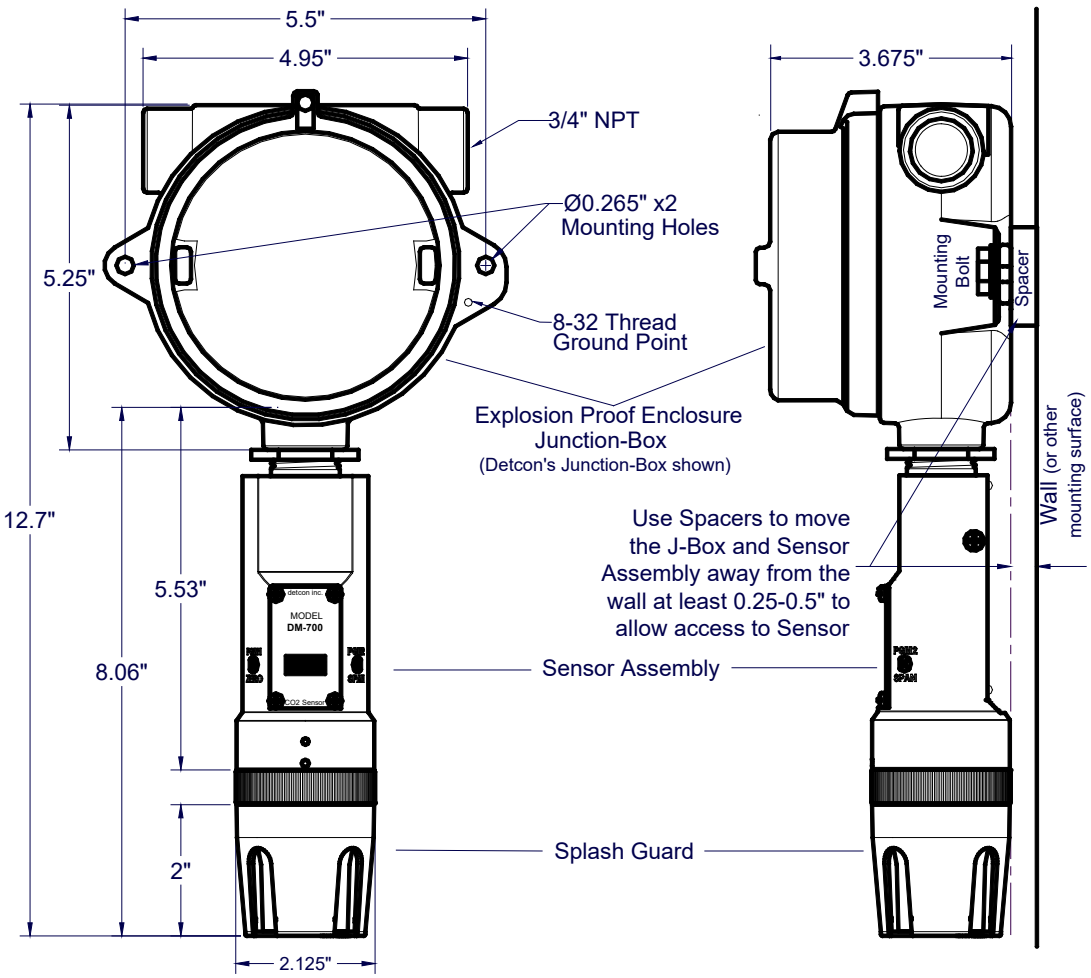

Figure 36 Outline and Mounting Dimensions

6.2.5 Electrical Installation

The Sensor Assembly should be installed in accordance with local electrical codes. The sensor assemblies are CSA/NRTL approved (US and Canada) for Class I, Division 1, Groups B, C, & D area classifications, and are ATEX Approved for II 2G Ex db ib IIB+H_2 Gb area classifications.

Proper electrical installation of the gas sensor is critical for conformance to Electrical Codes and to avoid damage due to water leakage. Refer to Figure 37 and Figure 38 for proper electrical installation.

NOTE: If a conduit run exits the secondary port, repeat the installation technique shown in Figure 37.

In Figure 37, the drain allows water condensation inside the conduit run to safely drain away from the sensor assembly. The electrical seal fitting is required to meet the National Electrical Code per NEC Article 500-3d (or Canadian Electrical Code Handbook Part 1 Section 18-154). Requirements for locations of electrical seals are covered under NEC Article 501-5. Electrical seals also act as a secondary seal to prevent water from entering the wiring terminal enclosure. However, they are not designed to provide an absolute water-tight seal, especially when used in the vertical orientation.

NOTE: A conduit seal is typically required to be located within 18" of the Stainless Steel J-Box and Sensor Assembly or at the entry of the Aluminum J-Box and Sensor Assembly for North American installations. Crouse Hinds type EYS2, EYD2 or equivalent are suitable for this purpose.

NOTE: The Detcon Warranty does not cover water damage resulting from water leaking into the enclosure. Since the electronics are 100% epoxy encapsulated, only the wire terminations can get wet. This could cause abnormal operation and possibly cause corrosion to the terminal connections. However, it would not be expected to cause permanent damage to the sensor.

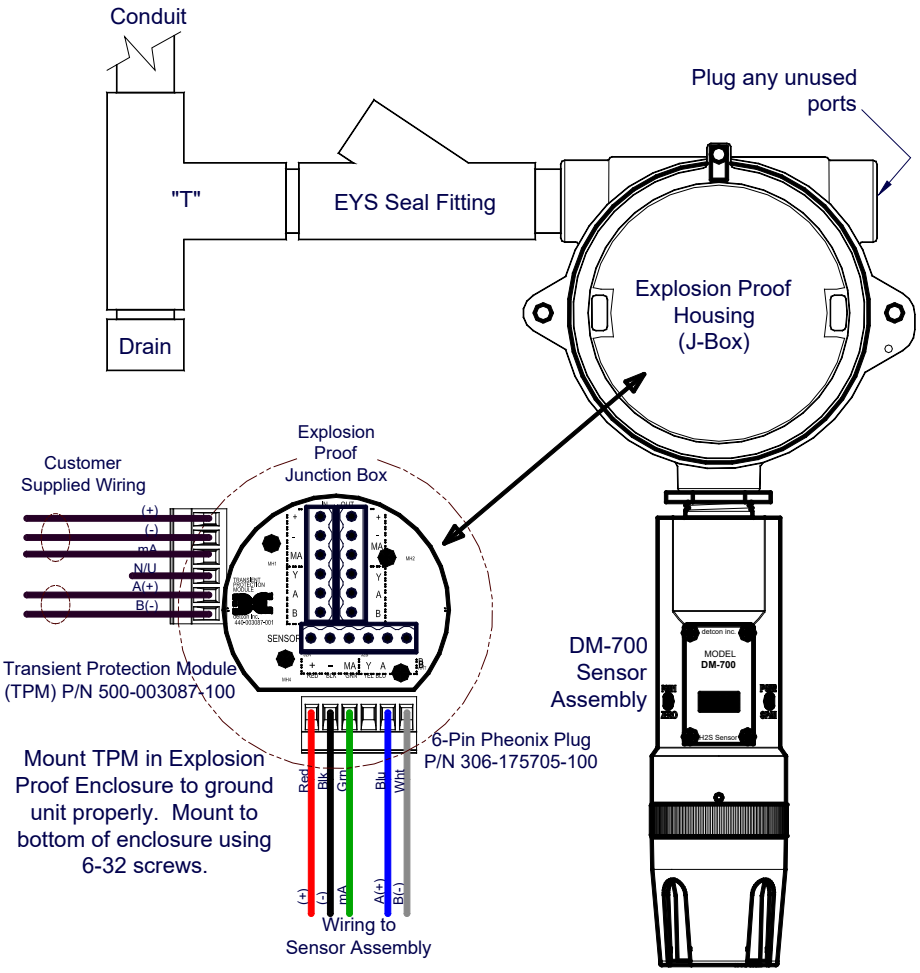

Figure 37 Typical Installation

NOTE: Any unused ports shall be blocked with suitable ¾" male NPT plugs. Detcon supplies one ¾" NPT male plug with their accessory J-box enclosures (Detcon P/N 8522-750). If connections are other than ¾" NPT, use an appropriate male plug of like construction material.

NOTE: All devices connecting to the ¾" NPT conduit entries should be tightened to a minimum of 16 foot-pounds torque.

NOTE: The flamepath joints are not intended to be repaired if damaged.

NOTE: For ATEX use, cable glands, adapters, and/or blanking elements shall be ATEX certified to Ex d IIC and shall be installed.

WARNING: Cables and cable glands must be rated for ≥90°C.

NOTE: Connect earth wire to crimped terminal (≥4mm^2) (Internal and external ground points).

6.2.6 Field Wiring

Detcon Model DM-700 toxic gas sensors assemblies require three conductor connections between power supplies and host electronic controller's 4-20mA output, and two conductor connections for the Modbus™ RS-485 serial interface. Wiring designations are + (DC), – (DC), mA (sensor signal), and Modbus™ RS-485 A (+), and B (-). Maximum wire length between sensor and 24VDC source is shown in the Table 9 below. Maximum wire size for termination in the Detcon J-Box accessory is 14 gauge.

Table 9 Wire Gauge vs. Distance

AWG	WIRE DIA.	METERS	Feet	Over-Current Protection
22	0.723mm	700	2080	3A
20	0.812mm	1120	3350	5A
18	**1.024MM**	1750	5250	7A
16	1.291mm	2800	8400	10A
14	1.628mm	4480	13,440	20A

NOTE 1: Wiring table is based on stranded tinned copper wire and is designed to serve as a reference only.

NOTE 2: SHIELDED CABLE IS REQUIRED FOR INSTALLATIONS WHERE CABLE TRAYS OR CONDUIT RUNS INCLUDE HIGH VOLTAGE LINES OR OTHER POSSIBLE SOURCES OF INDUCED INTERFERENCE. SEPARATE CONDUIT RUNS ARE HIGHLY RECOMMENDED IN THESE CASES.

NOTE 3: The supply of power should be from an isolated source with over-current protection as stipulated in table.

Terminal Connections

CAUTION: Do not apply System power to the sensor until all wiring is properly terminated. Refer to Section 6.2.7.

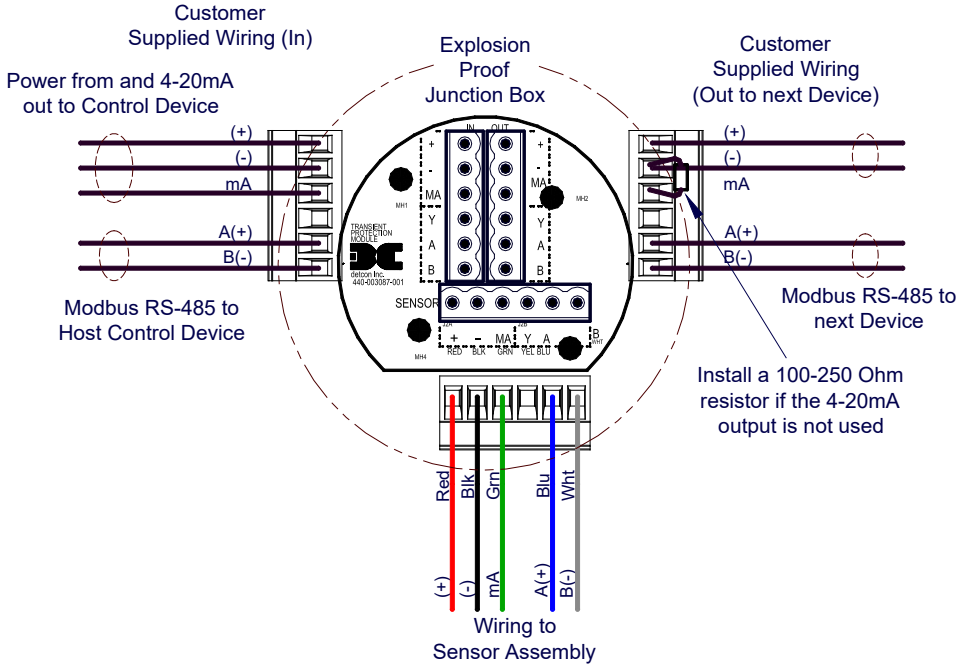

Figure 38 Sensor Wire Connections

a) Remove the junction box cover. Identify the terminal blocks for customer wire connections.

b) Observing correct polarity, terminate the 3-conductor 4-20mA field wiring (+, -, mA) to the sensor assembly wiring in accordance with the detail shown in Figure 38. If the 4-20mA output is not used, install a 100-250Ω resistor between the mA and (-) terminals on the Transient Protection Module.

NOTE: If the 4-20mA output is not being used, a 100-250Ω resistor ***must*** be installed between the mA and (-) terminals on the Transient Protection Module to ensure RS-485 communication is not disrupted by a 4-20mA Fault.

c) If applicable, terminate the RS-485 serial wiring as shown in Figure 38. Use the second plug (Out) as termination point on the customer side to facilitate a continuous RS-485 serial loop.

The RS-485 (if applicable) requires 24 gauge, two conductor, shielded, twisted pair cable between the sensor and host. General Cable Commodore part number ZO16P0022189 is recommended.

NOTE: Install a 120-ohm resistor across A & B terminals on the last sensor in the serial loop.

d) Trim all exposed wire leads if they are not permanently landed in the terminal block.

e) Replace the junction box cover.

6.2.7 Initial Start Up

Upon completion of all mechanical mounting and termination of all field wiring, apply system power in the range of 11.5-30VDC (24VDC typical) and observe the following normal conditions:

6.2.7.1 Toxic Gas Sensors

a) DM-700 display reads "0", and no fault messages are flashing.

b) A temporary upscale or downscale reading may occur as the sensor stabilizes. This upscale reading will typically decrease to "0" ppm within 1-2 minutes of power-up, assuming there is no gas in the area of the sensor.

c) Sensors that use a bias voltage require a longer time to stabilize. This can vary between 1 and 24 hours depending on the sensor type and range. Biased sensors include NH_3, NO, HCl, and VOC gasses (ethylene oxide, ethylene, methanol, formaldehyde….etc.).

NOTE: The 4-20mA signal is held constant at 4mA for the first two minutes after power up.

Initial Operational Tests

After a warm up period of 1 hour (or when zero has stabilized), the sensor should be checked to verify sensitivity to the target gas.

Material Requirements

- Detcon PN 613-120000-700 700 Series Splash Guard with integral Cal Port -OR-
- Detcon PN 943-000006-132 Threaded Calibration Adapter
- Detcon Span Gas; 50% of range target gas in balance N_2 or Air at fixed flow rate between 200-500cc/min

NOTE: Calibration gas generators using perm tubes or electrochemical sources may be used in place of span gas cylinders.

a) Attach the calibration adapter to the threaded sensor housing or connect tubing to integral cal port. Apply the test gas at a controlled flow rate of 200 - 500cc/min (500cc/min is the recommended flow). Observe that the ITM display increases to a level near that of the applied calibration gas value.

b) Remove test gas and observe that the ITM display decreases to "0".

Initial operational tests are complete. DM-700 toxic gas sensors are factory calibrated prior to shipment and should not require significant adjustment on start up. However, it is recommended that a complete calibration test and adjustment be performed 16 to 24 hours after power-up. Refer to zero and span calibration instructions in Section 6.3.4.

6.2.7.2 O_2 Deficiency Sensors

a) DM-700 display reads close to 20.9% and no fault messages are flashing.

b) The reading should stabilize within 1 to 2 minutes of power-up (assuming a 'normal' ambient O_2 concentration).

Initial Operational Tests

After a warm-up period of 5 minutes the sensor should be checked to verify response to O_2 deficiency.

Material Requirements

- Detcon PN 613-120000-700 700 Series Splash Guard with integral Cal Port -OR-
- Detcon PN 943-000006-132 Threaded Calibration Adapter
- Detcon Zero Gas: 100% N2 at fixed flow rate of 200-500cc/min

a) Attach the calibration adapter to the threaded sensor housing or connect tubing to the integral cal port. Apply the test gas at a controlled flow rate of 200-500cc/min (500cc/min is the recommended flow). Observe that the ITM display decreases to a level near zero.

b) Remove test gas and calibration adapter. The ITM display should return to a reading of 20.9%.

Initial operational tests are complete. DM-700 O_2 deficiency sensors are factory calibrated prior to shipment and should not require significant adjustment on start up. However, it is recommended that a complete calibration test and adjustment be performed 16 to 24 hours after power-up. Refer to zero and span calibration instructions in Section 6.3.4.

6.3 Operation

6.3.1 Programming Magnet Operating Instructions

The Operator Interface of the Model 700 Series gas sensors is accomplished via two internal magnetic switches located to either side of the LED display (see Figure 40). The two switches, labelled “PGM1” and “PGM2”, allow for complete calibration and configuration, thereby eliminating the need for area de-classification or the use of hot permits.

Figure 39 Magnetic Programming Tool

The magnetic programming tool (Figure 39) is used to operate the magnetic switches. Switch action is defined as momentary contact, 3-second hold, and 10-second hold. (Hold times are defined as the time from the point when the arrow-prompt “➔ “appears.) For momentary contact use, the programming magnet is briefly held over a switch location. For 3-second hold, the programming magnet is held in place over the switch location for three seconds. For 10-second hold, the programming magnet is held in place over the switch location for 10 seconds. The 3 and 10 second holds are generally used to enter calibration/program menus and save new data. The momentary contact is generally used to move between menu items and to modify set-point values. Arrows (“➔” and “➔”) are used on the LED display to indicate when the magnetic switches are activated. The location of “PGM1” and “PGM2” are shown in Figure 40.

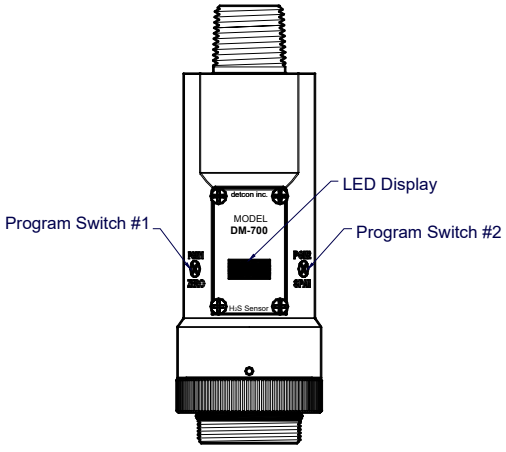

Figure 40 Magnetic Programming Switches

NOTE: While in the Program Mode, if there is no magnetic switch interaction after 4 consecutive menu scrolls, the sensor will automatically revert to normal operating condition. While changing values inside menu items, **if there is no magnet activity after 3-4 seconds the sensor will revert to the menu scroll.**
(Exception to this is with “Signal Output Check” mode.)

6.3.2 Operator Interface

The operating interface is menu-driven via the two magnetic program switches located under the target marks of the sensor housing. The two switches are referred to as “PGM1” and “PGM2”. The menu list consists of three major items that include sub-menus as indicated below. (Refer to the complete Software Flow Chart Figure 41.)

Normal Operation

Current Reading and Gas Type/Fault Status

Calibration Mode

AutoZero
AutoSpan

Program Mode

View Sensor Status
- Sensor Model Type
- Current Software Version
- Gas Type
- Range of Detection
- Serial ID address
- AutoSpan Level
- Days Since Last AutoSpan
- Remaining Sensor Life
- mA Output
- Input Voltage Supply
- Sensor Temperature
- Output
- Bias Voltage
- Gain Setting
- Raw Counts

Set AutoSpan Level
Set Serial ID
Set Range
Signal Output Check
Restore Default Settings

Software Flowchart

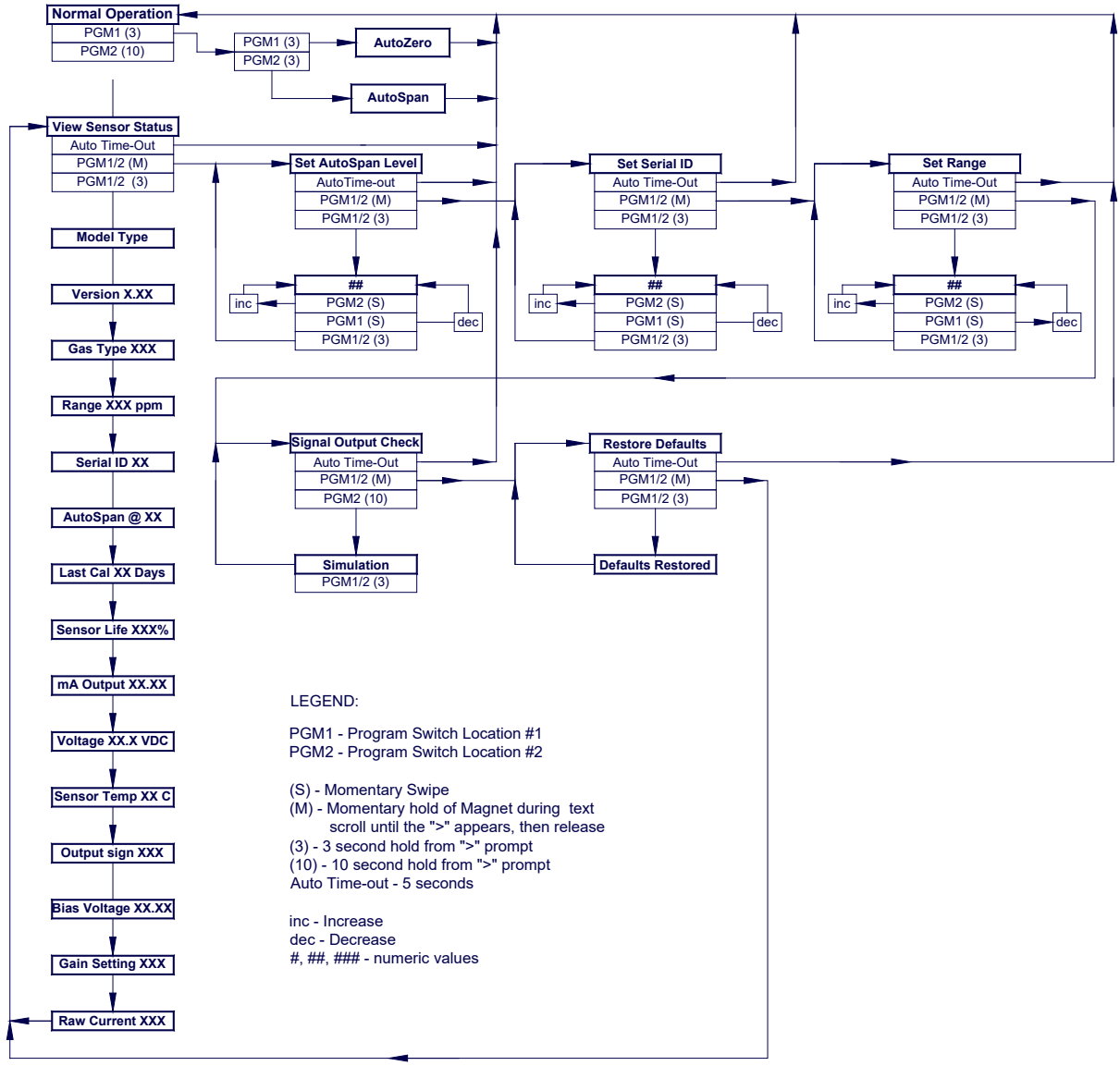

Figure 41 DM-700 Software Flowchart

6.3.3 Normal Operation

In normal operation, the ITM Display continuously shows the current sensor reading, which will normally appear as " 0 ". Once every 60 seconds the LED display will flash the sensor's measurement units and gas type (i.e. ppm H_2S). If the sensor is actively experiencing any diagnostic faults, a "Fault Detected" message will scroll across the display on the ITM display once every minute instead of the units of measure and the gas type. At any time, while the sensor is in "Fault Detected" mode, PGM1 or PGM2 can be swiped to prompt the sensor to display a list of the active faults.

In normal operation, the 4-20mA current output linearity corresponds with the full-scale range. The RS-485 Modbus™ serial output provides the current gas reading and complete fault status on a continuous basis when polled by the master device.

6.3.4 Calibration Mode

6.3.4.1 AutoZero

The AutoZero function is used to zero the sensor. AutoZero should be performed periodically or as required. AutoZero should be considered after periods of over-range target gas exposure. Local ambient air can be used to zero calibrate a toxic gas sensor as long as it can be confirmed that it contains no target or interference gasses. If this cannot be confirmed then a zero air or N_2 cylinder should be used. Pure N_2 must be used for zero calibration of the O_2 deficiency sensors.

Material Requirements:

- Detcon PN 327-000000-000 MicroSafe™ Programming Magnet
- Detcon PN 613-120000-700 700 Series Splash Guard with integral Cal Port and Calibration Wind Guard (P/N 943-000000-000) -OR-
- Detcon PN 943-000006-132 Threaded Calibration Adapter
- Detcon PN 942-001123-000 Zero Air cal gas (or use ambient air if no target gas is present).
- Detcon P/N 942-640023-100 Nitrogen 99.99%

NOTE 1: The zero gas source may be zero air or N_2 for toxic sensors, but must be pure N_2 (99.99%) for O_2 deficiency sensors

NOTE 2: The Calibration Wind Guard must be used when the Splashguard Adapter with integral Cal Port is used. Failure to use the Calibration Wind Guard may result in an inaccurate AutoZero calibration.

a) For toxic sensors, if the ambient air is known to contain no target gas content, then it can be used for zero calibration. If a zero gas cal cylinder is going to be used, attach the calibration adapter and set flow rate of 200-500cc/min (500cc/min is the recommended flow rate) and let sensor purge for 1-2 minutes before executing the AutoZero. For O_2 deficiency sensors, apply N_2 at a set flow rate of 500cc/min for 3-5 minutes before executing AutoZero.

b) From Normal Operation, enter Calibration Mode by holding the programming magnet over PGM1 for 3 seconds. Note, the "➔" prompt will show that the magnetic switch is activated during the 3 second hold period. The display will then scroll "**PGM1=AutoZero …PGM2=AutoSpan**". Hold the programming magnet over PGM1 for 3 seconds once the "➔" prompt appears to execute AutoZero (or allow to timeout in 5 seconds if AutoZero is not desired).

NOTE: Upon entering Calibration Mode, the 4-20mA signal drops to 2mA and is held at this level until the program returns to normal operation. Modbus™ Status Register bit 14 is also set to signify when the sensor is in-calibration mode.

c) The ITM will display the following sequence of text messages as it proceeds through the AutoZero sequence:

Zero Cal . . . Setting Zero . . . Zero Saved (each will scroll twice)

d) Remove the zero gas and calibration adapter, if applicable.

6.3.4.2 AutoSpan

The AutoSpan function is used to span calibrate the sensor. AutoSpan should be performed periodically or as required. AutoSpan should be considered after periods of over-range target gas exposure. Unless otherwise specified, span adjustment is recommended at 50% of range. This function is called "AUTO SPAN".

NOTE: Before performing AutoSpan Calibration, verify that the AutoSpan level matches the span calibration gas concentration as described in Section 6.3.5.2.

Material Requirements:

- Detcon PN 327-000000-000 MicroSafe™ Programming Magnet
- Detcon PN 613-120000-700 700 Series Splash Guard with integral Cal Port -OR-
- Detcon PN 943-000006-132 Threaded Calibration Adapter
- Detcon Span Gas (See Detcon for Ordering Information). Recommended span gas is 50% of range with target gas. Other suitable span gas sources containing the target gas in air or N_2 balance are acceptable.

NOTE 1: Contact Detcon for Ordering Information on Span Gas cylinders.

NOTE 2: A target gas concentration of 50% of range is strongly recommended. This should be supplied at a controlled flow rate of 200 to 500cc/min, with 500cc/min being the recommended flow rate. Other concentrations can be used if they fall within allowable levels of 5% to 100% of range.

NOTE 3: Ambient air should be used to calibrate O2 deficiency sensors as long as the oxygen concentration is confirmed to be 20.9%

NOTE 4: It is generally not advised to use other gasses to cross-calibrate for span. Cross-calibration by use of other gasses should be confirmed by Detcon.

NOTE 5: The Calibration Wind Guard must be used when the Splashguard Adapter with integral Cal Port is used. Failure to use the Calibration Wind Guard may result in an inaccurate AutoSpan calibration.

CAUTION: Verification that the calibration gas level setting matches the calibration span gas concentration is required before executing "AutoSpan" calibration. These two numbers must be equal.

AutoSpan consists of entering Calibration Mode and following the menu-displayed instructions. The display will ask for the application of span gas in a specific concentration. The applied gas concentration must be equal to the calibration gas level setting. The factory default setting and recommendation for span gas concentration is 50% of range. If a span gas containing the recommended concentration is not available, other concentrations may be used as long as they fall between 5% and 100% of range. However, any alternate span gas concentration value must be programmed via the "**Set AutoSpan Level**" menu before proceeding with AutoSpan calibration. Follow the instructions "a" through "e" below for AutoSpan calibration.

a) Verify that the AutoSpan Level is equal to the Calibration Span Gas Concentration. (Refer to Section 6.3.5.1.) If the AutoSpan Level is not equal to the Calibration span gas concentration, adjust the AutoSpan Level as instructed in Section 6.3.5.2.

b) From Normal Operation, enter Calibration Mode by holding the programming magnet over PGM1 for 3 seconds. Note, the "➔" prompt will show that the magnetic switch is activated during the 3 second hold period. The display will then scroll "**PGM1=AutoZero . . . PGM2=AutoSpan**". Hold the programming magnet over PGM2 for 3 seconds to execute AutoSpan (or allow to timeout in 5 seconds if AutoSpan is not intended). The ITM will then scroll "**Apply XX ppm Gas**".

NOTE: Upon entering Calibration Mode, the 4-20mA signal drops to 2mA and is held at this level until the program returns to normal operation. Modbus™ Status Register bit 14 is also set to signify when the sensor is in-calibration mode.

c) Apply the span calibration test gas for toxic gas sensors at a flow rate of 200-500cc/min (500cc/min is the recommended flow rate). As the sensor signal begins to increase the display will switch to flashing "**XX**" reading as the ITM shows the sensor's "as found" response to the span gas presented. If it fails to meet the minimum in-range signal change criteria within 2½ minutes, the display will report "**Range Fault**" twice and the ITM will return to normal operation, aborting the AutoSpan sequence. The ITM will continue to report a "Range Fault" and will not clear the fault until a successful AutoSpan is completed.

NOTE: Ambient air should be used to calibrate O_2 deficiency sensors as long as the oxygen concentration is confirmed to be 20.9%. There is no need to apply a flow of gas.

For about 1 minute the reading will auto-adjust to the programmed AutoSpan level. For about another 30 seconds, the AutoSpan sequence checks the sensor for acceptable reading stability. If the sensor fails the stability check, the reading is re-adjusted back to the AutoSpan level and the cycle repeats until the stability check is passed. Up to three additional 30-second stability check periods are allowed before the unit reports a "**Stability Fault**" twice and the ITM will return to normal operation, aborting the AutoSpan sequence. The ITM will continue to report a "**Stability Fault**" and will not clear the fault until a successful AutoSpan is completed.

If the sensor passes the stability check, the ITM reports a series of messages:
"**Span OK**"
"**Sensor Life XXX%**"
"**Remove Span Gas**"

d) Remove the span gas source and calibration adapter. The ITM will report a live reading as it clears toward "0". When the reading clears below 5% of range, the ITM will display "**Span Complete**" and will revert to normal operation. If the sensor fails to clear to less than 5% in less than 5 minutes, a "**Clearing Fault**" will be reported twice and the ITM will return to normal operation, aborting the AutoSpan sequence. The ITM will continue to report a "**Clearing Fault**" and will not clear the fault until a successful AutoSpan is completed.

NOTE: When calibrating O2 deficiency sensors, there is no requirement to clear to <5% of range. The sensor will return to normal operation immediately after span adjustment.

e) The AutoSpan calibration is complete.

NOTE 1: If the sensor fails the minimum signal change criteria, a **"Range Fault"** will be declared and a "**Fault Detected**" message will be displayed alternately with the sensor's current reading. The 4-20mA output will be taken to 0mA and the 'Range Fault' fault bit will be set on the Modbus™ output.

NOTE 2: If the sensor fails the stability criteria, a **"Stability Fault"** will be declared and a "**Fault Detected**" message will be displayed alternately with the sensor's current reading. The 4-20mA output will be taken to 0mA and the 'Stability Fault' fault bit will be set on the Modbus™ output.

NOTE 3: If the sensor fails the clearing time criteria, a "**Clearing Fault**" will be declared and a **"Fault Detected**" message will be displayed alternately with the sensor's current reading. The 4-20mA output will be taken to 0mA and the 'Clearing Fault' fault bit will be set on the Modbus™ output.

6.3.5 Program Mode

Program Mode provides a "**View Sensor Status**" menu to check operational and configuration parameters. Program Mode provides for adjustment of the AutoSpan Level and Serial ID. Additionally, Program Mode includes the diagnostic function "Signal Output Check" and "Restore Factory Defaults".

The Program Mode menu items appear in the order presented below:

View Sensor Status

Set AutoSpan Level

Set Serial ID

Set Range

Signal Output Check

Restore Default Settings

Navigating Program Mode

From Normal Operation, enter Program Mode by holding the magnet over PGM2 for 10 seconds. Note, the "➔" prompt will show that the magnetic switch is activated during the 10 second hold period. The ITM will enter Program Mode and the display will display the first menu item "View Sensor Status". To advance to the next menu item, hold the magnet over PGM1 or PGM2 while the current menu item's text is scrolling. At the conclusion of the text scroll the arrow prompt ("➔" for PGM2 or "➔" for PGM1) will appear, and immediately remove the magnet. The ITM will advance to the next menu item. Repeat this process until the desired menu item is displayed. Note, PGM1 moves the menu items from right to left and PGM2 moves the menu items from left to right.

To enter a menu item, hold the magnet over PGM1 or PGM2 while the menu item is scrolling. At the conclusion of the text scroll the "➔"prompt ("➔" for PGM2 or "➔" for PGM1) will appear, continue to hold the magnet over PGM1 or PGM2 for an additional 3-4 seconds to enter the selected menu item. If there is no magnet activity while the menu item text is scrolling (typically 4 repeated text scrolls), the ITM will automatically revert to Normal Operation.

6.3.5.1 View Sensor Status

View Sensor Status displays all current configuration and operational parameters including: sensor type, software version number, gas type, detection range, AutoSpan level, days since last AutoSpan, estimated remaining sensor life, raw sensor current, mA output, input voltage and sensor ambient temperature.

From the **View Sensor Status** text scroll, hold the magnet over PGM1 or PGM2 until the "➔" prompt appears and continue to hold the magnet in place for an additional 3-4 seconds (until the display starts to scroll "Status Is"). The display will scroll the complete list of sensor status parameters sequentially:

Sensor Model Type
The menu item appears as: "Model DM-700"

Current Software Version
The menu item appears as: "Version 1.XX"

Gas Type
The menu item appears as: " Gas Type = H2S"

Range of Detection
The menu item appears as: "Range XXX ppm"

Serial ID address.
The menu item appears as: "Serial ID XX"

AutoSpan Level.
The menu item appears as: “AutoSpan at XX ppm”

Days Since Last AutoSpan.
The menu items appears as: “Last Cal XX days”

Remaining Sensor Life
The menu item appears as: “Sensor Life 100%”

mA Output
The menu item appears as: “mA Output XX.XX”

Input Voltage Supply
The menu item appears as: “Voltage XX.X VDC”

Sensor Temperature
The menu item appears as: “Operating Temp XX C”

Output
The menu item appears as: “Output X”

Bias Voltage
The menu item appears as: “Bias Voltage XXXmV”

Gain Setting
The menu item appears as: “Gain Setting XX”

Raw Counts
The menu item appears as: “Raw Counts XXXX”

When the status list sequence is complete, the ITM will revert to the “View Sensor Status” text scroll. The user can either: 1) review list again by executing another 3-4 second hold, 2) move to another menu item by executing a momentary hold over PGM1 or PGM2, or 3) return to Normal Operation via automatic timeout of about 15 seconds (the display will scroll “View Sensor Status” 4 times and then return to Normal Operation).

6.3.5.2 Set AutoSpan Level

Set AutoSpan Level is used to set the span gas concentration level that is being used to calibrate the sensor. This level is adjustable from 1% to approximately 75% or 95% dependent on full-scale range. The current setting can be viewed in View Program Status.

The menu item appears as: "**Set AutoSpan Level**"

From the **Set AutoSpan Level** text scroll, hold the magnet over PGM1 or PGM2 until the "➔" prompt appears and continue to hold the magnet in place for an additional 3-4 seconds (until the display starts to scroll "Set Level"). The display will switch to " XX" (where XX is the current gas level). Swipe the magnet momentarily over PGM2 to increase or PGM1 to decrease the AutoSpan Level until the correct level is displayed. When the correct level is achieved, hold the magnet over PGM1 or PGM2 for 3-4 seconds to accept the new value. The display will scroll "Level Saved", and revert to "Set AutoSpan Level" text scroll.

Move to another menu item by executing a momentary hold, or return to Normal Operation via automatic timeout of about 15 seconds (the display will scroll "Set AutoSpan Level" 4 times and then return to Normal Operation).

6.3.5.3 Set Serial ID

Detcon Model DM-700 sensors can be polled serially via RS-485 Modbus™ RTU. Refer to Section 6.4 for details on using the Modbus™ output feature.

Set Serial ID is used to set the Modbus™ serial ID address. It is adjustable from 01 to 256 in hexadecimal format (01-FF hex). The current serial ID can be viewed in View Sensor Status using the instruction given in Section 6.3.5.1.

The menu item appears as: "**Set Serial ID**".

From the "**Set Serial ID"** text scroll, hold the programming magnet over PGM1 or PGM2 until the "➔" prompt appears and continue to hold the magnet in place for an additional 3-4 seconds (until the display starts to scroll "Set ID"). The display will then switch to " **XX**" (where XX is the current ID address). Swipe the magnet momentarily over PGM2 to increase or PGM1 to decrease the hexadecimal number until the desired ID is displayed. Hold the magnet over PGM1 or PGM2 for 3-4 seconds to accept the new value. The display will scroll "ID Saved", and revert to "Set Serial ID" text scroll.

Move to another menu item by executing a momentary hold, or, return to Normal Operation via automatic timeout of about 15 seconds (the display will scroll "Set Serial ID" 5 times and then return to Normal Operation).

6.3.5.4 Set Range

The full-scale range of a DM-700 sensor is determined at the time of order. The Intelligent Plug-in Sensor is factory calibrated for this range. However, if the application requirements change and the user needs to alter the original range, the "Set Range" function can be used to make field adjustments.

The currently selected full-scale range is displayed in the "**View Sensor Status**" menu. The factory calibrated full-scale range is printed on the Intelligent Plug-in Sensor Label. When a new range is selected the 4-20mA and Modbus™ outputs will automatically be rescaled, and the span gas level will default to 50% of the new range.

The menu item appears as: "**Set Range**"

From the "**Set Range"** text scroll, hold the programming magnet over PGM1 or PGM2 until the "➔" prompt appears and continue to hold the magnet in place for an additional 3-4 seconds (until the display starts to scroll "Set Range"). The display will then switch to "XXX"(where XXX is the current Range). Swipe the magnet momentarily over PGM2 to increase or PGM1 to decrease the range Level until the desired range is displayed. Hold the magnet over PGM1 or PGM2 for 3 seconds to accept the new value. The display will scroll "Range Saved", and revert to "Set Range" text scroll.

Selectable ranges are:
1, 2, 3, 4, 5, 6, 7, 8, 9, 10
15, 20, 25, 30, 35, 40, 45, 50, 55, 60, 65, 70, 75, 80, 85, 90, 95, 100
150, 200, 250, 300, 350, 400, 450, 500, 600, 700, 800, 900, 1000
2000, 3000, 4000, 5000, 6000, 7000, 8000, 9000, 10,000

The range can only be changed to a new range that is between 4 times greater or 4 times less than that of the current plug-in sensor. I.E. For a plug-in sensor of 100ppm, the range can be set as low as 25ppm or as high as 400ppm.

Move to another menu item by executing a momentary hold, or, return to Normal Operation via automatic timeout of about 15 seconds (the display will scroll "Set Range" 4 times and then return to Normal Operation).

NOTE1: The sensor should be re-calibrated after any change is made to the sensor range. AutoSpan and AutoZero should be re-established.

NOTE2: When a new plug-in sensor is installed, the ITM will automatically default to the range of the plug-in sensor.

6.3.5.5 Signal Output Check

Signal Output Check provides a simulated 4-20mA output and RS-485 Modbus™ output. This simulation allows the user to conveniently perform a functional system check of their entire safety system. This signal output simulation also aids the user in performing troubleshooting of signal wiring problems.

The menu item appears as: "**Signal Output Check**".

From the "**Signal Output Check**" text scroll, hold the magnet over PGM1 or PGM2 until the "➔" prompt appears and then hold continuously for an additional 10 seconds. Once initiated, the display will scroll "**Simulation Active**" until the function is stopped. During simulation mode, the 4-20mA value will be increased from 4.0mA to 20.0mA (in 1% of range increments at about a 1 second update rate) and then decreased from 20.0mA to 4.0mA. The same simulation sequence is applied to the Modbus™ output gas reading.

NOTE: Signal Output Check stays active indefinitely until the user stops the function. There is no automatic timeout for this feature.

To end simulation mode, hold magnet over PGM1 or PGM2 for 3 seconds. The display will either move to the prior menu item or move to the next menu item respectively.

Move to another menu item by executing a momentary hold, or, return to Normal Operation via automatic timeout of about 15 seconds.

6.3.5.6 Restore Factory Defaults

Restore Factory Defaults is used to clear current user configuration and calibration data from memory and revert to factory default values. This may be required if the settings have been configured improperly and a known reference point needs to be re-established to correct the problem.

This menu item appears as: "**Restore Defaults**".

NOTE: Restoring factory defaults should only be used when absolutely necessary. All previously existing configuration inputs will have to be re-entered if this function is executed. A full 10-second magnet hold on PGM 2 is required to execute this function.

From the "**Restore Defaults**" text scroll, hold the programming magnet over PGM2 until the "➔" prompt appears and continue to hold 10 seconds. The display will scroll "**Restoring Defaults**", followed by "**New ECS Connected**", and "**Range XX**" where XX is the default range of the intelligent plug-in sensor.

Move to another menu item by executing a momentary hold, or, return to Normal Operation via automatic timeout of about 15 seconds (the display will scroll “Restore Defaults” 4 times and then return to Normal Operation).

Following the execution of “**Restore Defaults**”, the DM-700 will revert to its factory default settings. The default settings are:

- Serial ID = 01. The Serial ID must be set appropriately by the operator (Section 6.3.5.3).

NOTE: The following must be performed in order before the sensor can be placed in operation.

- AutoSpan Level = 50% of range. AutoSpan level must be set appropriately by the operator (Section 6.3.5.2).
- Range: Defaults to range of intelligent plug-in sensor, must be set to the appropriate level by the operator (Section 6.3.5.4).
- AutoZero: AutoZero Settings are lost and user must perform new AutoZero (Section 6.3.4.1).
- AutoSpan: AutoSpan Settings are lost and user must perform new AutoSpan (Section 6.3.4.2).

6.3.6 Program Features

Detcon DM-700 toxic gas sensors incorporate a comprehensive set of diagnostic features to achieve Fail-Safe Operation. These Operational features and Failsafe Diagnostic features are detailed below.

6.3.6.1 Operational Features

Over-Range
When gas greater than the full-scale range is detected, the ITM display will continuously flash the full-scale reading. This designates an over-range condition. The 4-20mA signal will report a 22mA output during this time.

Negative Drift
In cases where the sensor may drift negative, the display will show a negative reading between 5% and 10% of the sensors full scale range; I.E. if a 0-100ppm sensor drifts to negative 6 the display will indicate -6. In cases where the full scale range of the sensor is less than 10ppm, due to the limited space on the display, the decimal point will be displayed as an asterisk (*) to denote a negative reading. I.E. if a 0-5ppm sensor drifts to negative 0.32 the display will show 0*32.

In-Calibration Status
When the sensor is engaged in AutoZero or AutoSpan calibrations, the 4-20 mA output signal is taken to 2.0 mA and the in-calibration Modbus™ Status Register bit 14 is set. This alerts the user that the ITM is not in an active measurement mode. This feature also allows the user to log the AutoZero and AutoSpan events via their master control system.

Sensor Life
Sensor Life is calculated after each AutoSpan calibration and is reported as an indicator of remaining service life. It is reported in the "View Sensor Status" menu and as a RS-485 Modbus™ register bit. Sensor Life is reported on a scale of 0-100%. When Sensor Life falls below 25%, the sensor cell should be replaced within a reasonable maintenance schedule.

Last AutoSpan Date
This reports the number of days that have elapsed since the last successful AutoSpan. This is reported in the View Sensor Status menu. After 180 days, an AutoSpan Fault will be declared.

6.3.6.2 Fault Diagnostic/Failsafe Features

Fail-Safe/Fault Supervision
Model DM-700 sensors are designed for Fail-Safe operation. If any of the diagnostic faults listed below are active, the ITM Display will scroll the message "Fault Detected" every 1 minute during normal operation. At any time during "Fault Detected" mode, holding the programming magnet over PGM1 or PGM2 for 1 second will display the active fault(s). All active faults are reported sequentially.

Most fault conditions result in failed operation of the sensor. In these cases the 4-20mA signal is dropped to the universal fault level of 0mA. These include the AutoSpan Calibration faults, Heater Fault, Sensor Fault, Processor Fault, Memory Fault, Loop Fault, and Input Voltage Fault. The 0mA fault level is not employed for Temperature or AutoSpan Faults. For every diagnostic fault condition the associated RS-485 Modbus™ fault register will be flagged to alert the user digitally.

NOTE: Refer to the Troubleshooting Guide section for guidance on how to address fault conditions.

Range Fault – AutoSpan
If the sensor fails the minimum signal change criteria (Section 6.3.4.2) during AutoSpan sequence, the "Range Fault" will be declared. A "Range Fault" will cause a "Fault Detected" message to flash intermittently on the ITM display and drop the 4-20mA output to 0mA. The Modbus™ fault register bit for Range Fault will be set and will not clear until the fault condition has been cleared. The sensor should be considered 'Out-of-Service' until a successful AutoSpan calibration is performed.

Stability Fault - AutoSpan
If the sensor fails the signal stability criteria (Section 6.3.4.2) during AutoSpan sequence, the "Stability Fault" will be declared. A "Stability Fault" will cause a "Fault Detected" message to flash intermittently on the ITM display and drop the mA output to 0 mA. The Modbus™ fault register bit for Stability Fault will be set and will not clear until the fault condition has been cleared. The sensor should be considered as 'Out-of-Service' until a successful AutoSpan calibration is performed.

Clearing Fault - AutoSpan

If the sensor fails the signal stability criteria (Section 6.3.4.2) during AutoSpan sequence, the "Clearing Fault" will be declared. A "Clearing Fault" will cause a "Fault Detected" message to flash intermittently on the ITM display and drop the mA output to 0 mA. The Modbus™ fault register bit for Clearing Fault will be set and will not clear until the fault condition has been cleared. The sensor should be considered as 'Out-of-Service' until a successful AutoSpan calibration is performed.

Zero Fault

If the sensor drifts to < -10% of range, an "Under-Range Fault" will be declared. An "Under-Range Fault" will cause a "Fault Detected" message to flash intermittently on the ITM display. The Modbus™ fault register bit for Under-Range Fault will be set and will not clear until the fault condition has been cleared. If an Under-Range Fault occurs, the 4-20 mA signal will be set at 0mA until the fault condition is resolved.

Sensor Fault

If the intelligent plug-in sensor is not plugged in, plugged in incorrectly, or there is a communication failure, a "Sensor Fault" is declared. A "Sensor Fault" will cause a "Fault Detected" message to flash intermittently on the ITM display. The Modbus™ fault register bit for Sensor Fault will be set and will not clear until the fault condition has been cleared. If a Sensor Fault occurs, the 4-20mA signal will be set at 0mA until the fault condition is resolved.

Processor Fault

If the detector has any unrecoverable run-time errors, a "Processor Fault" is declared. A "Processor Fault" will cause a "Fault Detected" message to flash intermittently on the ITM display. The Modbus™ fault register bit for Processor Fault will be set and will not clear until the fault condition has been cleared. If a Processor Fault occurs, the 4-20 mA signal will be set at 0mA until the fault condition is resolved.

Memory Fault

If the detector has a failure in saving new data to memory, a "Memory Fault" is declared. A "Memory Fault" will cause the "Fault Detected" message to flash intermittently on the ITM display. The Modbus™ fault register bit for Memory Fault will be set and will not clear until the fault condition has been cleared. If a Memory Fault occurs, the 4-20mA signal will be set at 0mA until the fault condition is resolved.

4-20 mA Loop Fault

If the sensor detects a condition where the 4-20mA output loop is not functional (high loop resistance or failed circuit function) a "4-20mA Fault" is declared. A "4-20mA Fault" will cause the "Fault Detected" message to scroll once a minute on the ITM display. The Modbus™ fault register bit for Loop Fault will be set and will not clear until the fault condition has been cleared. If a Loop Fault occurs, the 4-20mA signal will be set at 0mA until the fault condition is resolved. If the 4-20mA current loop is still out of tolerance, contact Detcon at Detcon-service@teledyne.com, or contact Detcon customer service.

Input Voltage Fault

If the detector is currently receiving an input voltage that is outside of the 11.5-28VDC range, an "Input Voltage Fault" is declared. An "Input Voltage Fault" will cause the "Fault Detected" message to flash intermittently on the ITM display. The fault register bit for Input Voltage Fault will be set and will not clear until the fault condition has been cleared. If an Input Voltage Fault occurs, the 4-20mA signal will be set at 0mA until the fault condition is resolved.

Temperature Fault

If the detector is currently reporting an ambient temperature that is outside of the –40C° to +75C° range a "Temperature Fault" is declared. A "Temperature Fault" will cause the "Fault Detected" message to flash intermittently on the ITM display. The Modbus™ fault register bit for Temperature Fault will be set and will not clear until the fault condition has been cleared. If a Temperature Fault occurs, the 4-20mA signal remains operational.

AutoSpan Fault

If 180 days has elapsed since the last successful AutoSpan, an AutoSpan Fault will be generated. An "AutoSpan Fault" will cause the "Fault Detected" message to flash intermittently on the ITM display. The Modbus™ fault register bit for AutoSpan Fault will be set and will not clear until the fault condition has been cleared by executing a successful AutoSpan. If an AutoSpan occurs, the 4-20mA signal remains operational.

6.4 RS-485 Modbus™ Protocol

Model DM-700 sensors feature Modbus™ compatible communications protocol and are addressable via the program mode. Other protocols are available. Contact the Detcon factory for specific protocol requirements. Communication is two wire, half duplex 485, 9600 baud, 8 data bits, 1 stop bit, no parity, with the sensor set up as a slave device. A master controller up to 4000 feet away can theoretically poll up to 256 different sensors. This number may not be realistic in harsh environments where noise and/or wiring conditions would make it impractical to place so many devices on the same pair of wires. If a multi-point system is being utilized, each sensor should be set for a different address. Typical address settings are: 01, 02, 03, 04, 05, 06, 07, 08, 09, 0A, 0B, 0C, 0D, 0E, 0F, 10, 11…etc.

Sensor RS-485 ID numbers are factory default to 01. These can be changed in the field via the Operator Interface described in Section 6.3.5.3.

The following section explains the details of the Modbus™ protocol that the DM-700 sensor supports.

Code 03 - Read Holding Registers is the only code supported by the transmitter. Each transmitter contains 6 holding registers which reflect its current status.

Table 10 Modbus™ Registers

FC	REG	Content Description	R/W	Content Definition		
				Value	**Meaning**	**Range**
03	40000	Device Type	R	8	700 Sensor	
03 06	40001 40001	Read Detectable Range[1,2] Write Detectable Range	R/W	100 10000	For 0-100 For 0-10000[2]	DM – 0 to 10000 FP – Read only TP – 20, 50, 100, 200 IR – 0 to 10000 PI – 0 to 10000
03	40002	Read Concentration[3,2]	R	1000	Bound by range. If > range, this value is in fault.	
03 06	40003 40003	Read AutoSpan Level[4,2] Write AutoSpan Level	R/W	50	Span gas at 50	DM – 1% to 95% of Range (40001) FP – 5% to 95% of Range (40001) TP – 2% to 50% of Range (40001) IR – 5% to 95% of Range (40001) PI – 1% to 95% of Range (40001)
03	40004	Read Sensor Life	R	85	For 85% sensor life	

FC	REG	Content Description	R/W	Content Definition		
				Value	**Meaning**	**Range**
03	40005	Read Fault Status Bits[5]	R	0x0001 0x0002 0x0004 0x0008 0x0010 0x0020 0x0040 0x0080 0x0100 0x0200 0x0400 0x0800 0x1000 0x2000 0x4000 0x8000	Global Fault Auto Span Fault Temperature Fault 4-20mA Fault Input Voltage Fault Memory Fault Processor Fault Clearing Fault Stability Fault Range Fault Sensor Fault Zero Fault Sensor Fault 2 <reserved> In Calibration Communication Error	
03	40006	Read Model #	R	1, 2, 3, 4, 5	DM, FP, IR, TP, PID respectively	
03	40007	Read Days Since Cal	R	29	29days	
03	40008	4-20 Current Output mA x100	R	400	4.00mA	**Range**
03	40009	Read Input Voltage V x100	R	2400	24.00V	
03	40010	Read Temperature	R	28	28 °C	
03/06	40011	Special #1	R/W		Function dependent on value of 40006 (See Special Register Table 4)	
03/06	40012	Special #2	R/W		Function dependent on value of 40006 (See Special Register Table 4)	
03	40013	Special #3	R		Function dependent on value of 40006 (See Special Register Table 4)	

FC	REG	Content Description	R/W	Content Definition		
				Value	Meaning	Range
03/ 06	40014	Special #4	R/W		Function defendant on value of 40006 (See Special Register Table 4)	
03	40015	Calibration Status	R	0x0000 0x0001 0x0002 0x0003 0x0004	Idle Zero Calibration Started Span Calibration Started Span Set Span Calibration Unsuccessful	
06	40015	Calibration Enable	W	0x0001 0x0002 0x0008 0x0009 0x000A 0x000B	Set Zero Set Span Signal simulation mode Set FP Bridge Voltage Set TP Heater Power Set IR Gain	
03	40016	Read Text 1, first char in L	R		Two Char of Gas/Units String[6]	
03	40017	Read Text 2	R		Two Char of Gas/Units String[6]	
03	40018	Read Text 3	R		Two Char of Gas/Units String[6]	
03	40019	Read Text 4	R		Two Char of Gas/Units String[6]	
03	40020	Read Text 5, last char in H	R		Two Char of Gas/Units String[6]	
03	40021	Text null terminator in L	R		Two Char of Gas/Units String[6]	

Integer ranges from 1 all the way to 10,000.

[2] Units are determined by "units" field in the "notation" string

[3] Gas Reading times one *(x 1)* with units in notation string for "Low Range" = 0. Gas Reading times one *(x 10)* with units in notation string for "Low Range" = 1. Gas Reading times one *(x 100)* with units in notation string for "Low Range" = 2.

[4] Span Gas must be less than or equal to Detectable Range and is usually about ½ of it.

[5] Fault status bits self-reset when fault clears

[6] Text in ASCII, in order L byte, H byte, L byte… See field descriptions of notation string.

Gas/Units String

Character #	1	2	3	4	5	6	7	8	9	10	11
Description	Units			0x20	Gas Type						0x00

Units – This field is 'PPM', 'PPB', or '_ _ %' (where ' _ ' is a space, 0x20).

0x20 – The units filed is terminated with an ASCII space (0x20)

Gas Type – This field contains the gas type of the cell. Any ASCII string is permissible

0x00 – The notation string is terminated with an ASCII null character

Table 11 Modbus™ Special Registers

REG	DM (40006 = 1)		FP (40006 = 2)	IR (40006 = 3)	TP (40006 = 4)[1]	PI (40006 = 5)	
40011	Low Range= 0, 1, 2 0: Range >25 (0 decimal place) 1: Range 10-25 (1 decimal place) 2: Range <10 (2 decimal place)		Gas Factor **(R/W)** **Range = 79 to 565**	Gas Factor **(R/W)** **Range = 20 to 565**	Heater Power (mW) **(R/W)**	Low Range= 0, 1, 2 0: Range >25 1: Range 10-25 2: Range <10	
40012	0x8XXX 0x0XXX 0xX000 0xX096 0xX0C8 0xX12C	Positive Polarity Cell Negative Polarity Cell Bias = 0mV Bias = 150mV Bias = 200mV Bias = 300mV	Cal Factor **(R/W)** **Range = 79 to 565**	Active Counts	Heater Voltage (mV)	0x8XXX 0x0XXX 0xX000 0xX096 0xX0C8 0xX12C	Positive Polarity Cell Negative Polarity Cell Bias = 0mV Bias = 150mV Bias = 200mV Bias = 300mV
40013	Gain Code (integer between 0 & 15)		Bridge Current (mA)	Reference Counts	Sensor Resistance (x100 Ω)	Gain Code	
40014	Raw Counts 0-0xFFFF (0x8000 = nominal 0)		Bridge Voltage (mV) **(Read only)**	Range Divisor 1,10,100, or 1000	Heater Current (mA)	Raw Counts	

Only possible ranges are 20, 50, 100, 200. Modbus register 40001 will contain either 20, 50, 100, or 200, range divisor is not necessary.

6.5 Service and Maintenance

6.5.1 Calibration Frequency

In most applications, quarterly span calibration intervals will assure reliable detection. However, industrial environments differ. Upon initial installation and commissioning, close frequency tests should be performed, weekly to monthly. Test results should be recorded and reviewed to determine a suitable calibration interval. If, after 180 days, an AutoSpan Calibration is not performed, the ITM will generate an AutoSpan Fault.

6.5.2 Visual Inspection

The Sensor should be inspected annually. Inspect for signs of corrosion, pitting, and water damage. During visual inspection, the Splash Guard should be inspected to insure that it is not blocked. Examine the plug-in sensor for signs of physical blockage, electrolyte leakage, or severe corrosion. Also, inspect inside the Junction Box for signs of water accumulation or Terminal Block corrosion.

6.5.3 Condensation Prevention Packet

A moisture condensation packet should be installed in every explosion proof Junction Box. The moisture condensation prevention packet will prevent the internal volume of the J-Box from condensing and accumulating moisture due to day-night humidity changes. This packet provides a critical function and should be replaced annually. Detcon's PN is 960-202200-000.

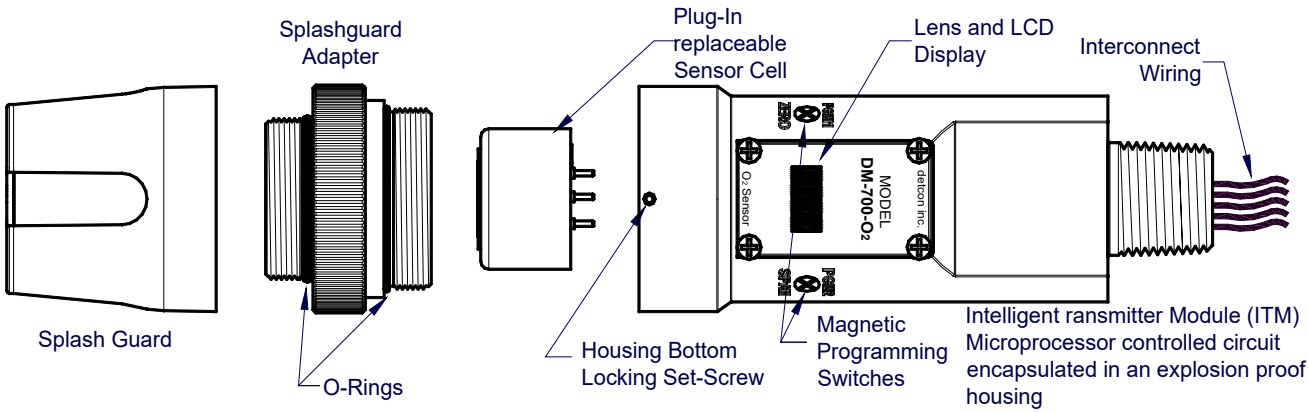

Figure 42 Sensor Assembly

6.5.4 Replacement of Intelligent Plug-in Sensor

NOTE: It is not necessary to remove power while changing the plug-in toxic gas sensor in order to maintain area classification, since it is intrinsically safe.

a) Use a 1/16" Allen wrench to release the locking setscrew that locks the ITM and Splash Guard Adapter together (One turn will suffice - Do not remove setscrew completely).

b) Remove splashguard. Unthread and remove the Splash Guard Adapter from the ITM.

d) Gently pull the plug-in sensor out of the ITM. Orient the new plug-in sensor so that it matches with the female connector pins. Use the alignment marks provided to assure alignment is correct. When properly aligned, press the sensor in firmly to make the proper connection.

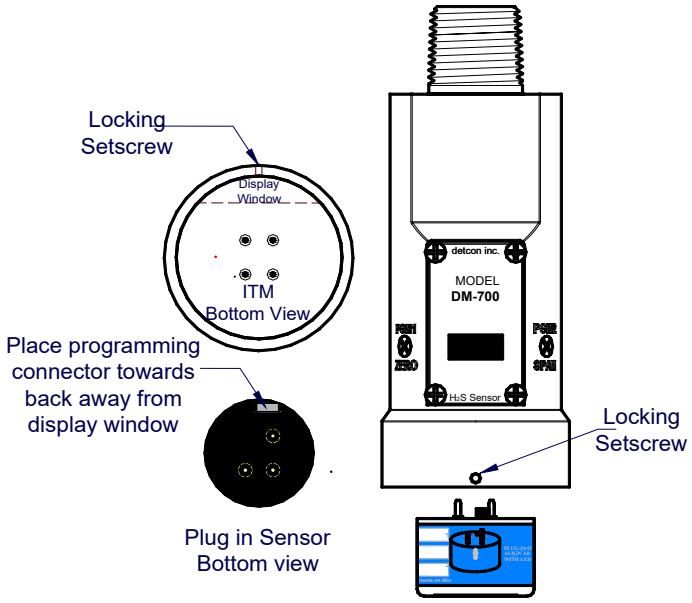

Figure 43 Sensor Cell and ITM Mating

e) Thread the Splash Guard Adapter onto the ITM to a snug fit and tighten the locking setscrew using the 1/16" Allen wrench. Reinstall the splashguard.

f) Verify the gas type and range of the new sensor by checking in View Program Status. It is recommended AutoZero and AutoSpan functions be performed, as per Section 6.3.4, to match the new intelligent plug-in sensor with the ITM.

6.5.5 Replacement of ITM

a) Remove the power source from the sensor assembly. Disconnect all sensor wire connections at the J-Box taking note of the wire connections.

NOTE: It is necessary to remove power to the J-Box while changing the ITM in order to maintain area classification.

b) Use a wrench and the wrench flats provided at the top section of the ITM and unthread the ITM until it can be removed.

c) Use a 1/16" Allen wrench to release the locking setscrew that locks the ITM and Splash Guard Adapter together (One turn will suffice - Do not remove setscrew completely).

d) Remove splashguard. Unthread and remove the Splash Guard Adapter from the ITM.

e) Gently remove the plug-in toxic gas sensor from the old ITM and install it in the new ITM. Orient the plug in sensor so that it matches with the female connector pins on the new ITM, placing the programming connector to the back and press the sensor in firmly to make proper connection.

f) Thread the Splash Guard Adapter onto the ITM until snug, tighten the locking setscrew and reconnect splashguard.

g) Feed the sensor assembly wires through the ¾" female NPT mounting hole and thread the assembly into the J-box until tight and the ITM lens faces toward the front access point. Connect the sensor assembly wires inside J-Box (Refer to Section 6.2.6, and Figure 38).

h) Perform Set AutoSpan Level, Set Serial ID, Set Range, and then perform a successful AutoZero and AutoSpan before placing sensor into service.

6.5.6 Replacement of DM-700 Sensor Assembly

a) Remove the power source from the sensor assembly. Disconnect all sensor wire connections at the J-Box.

NOTE: It is necessary to remove power to the J-Box while changing the DM-700 sensor in order to maintain area classification.

b) Use a wrench and the wrench flats provided at the top section of the ITM and unthread the ITM until it can be removed.

c) Use a 1/16" Allen wrench to release the locking setscrew that locks the ITM and Splash Guard Adapter together (One turn will suffice - Do not remove setscrew completely).

d) Remove splashguard. Unthread and remove the Splash Guard Adapter from the ITM.

e) Feed the new DM-700 sensor assembly wires through the ¾" female NPT mounting hole and thread the assembly into the J-box until tight and the ITM lens faces toward the front access point. Connect the sensor assembly wires inside J-Box (Refer to Section 6.2.6, and Figure 38).

d) DM-700 sensors are factory calibrated, however, they require an initial AutoZero and AutoSpan calibration (Section 6.3.4), and must be configured per customer specific application requirements.

6.6 Troubleshooting Guide

Refer to the list of Failsafe Diagnostic features listed in Section 6.3.6.2 for additional reference in troubleshooting activities. Listed below are some typical trouble conditions and their probable cause and resolution path.

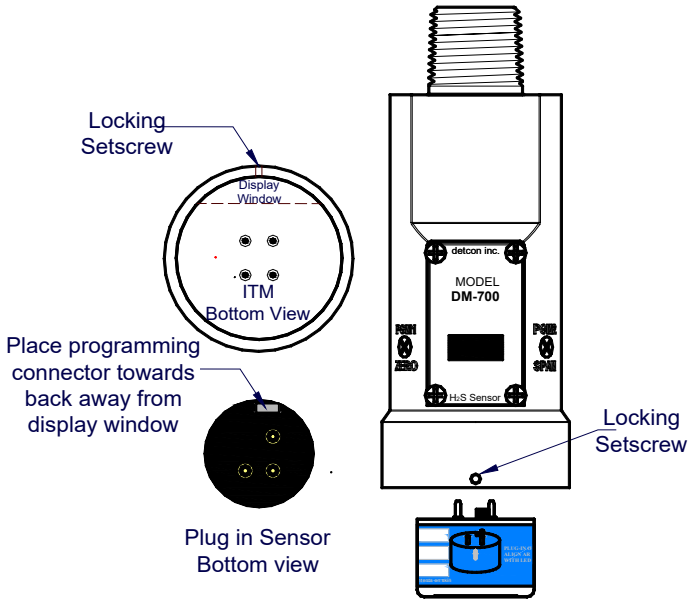

Figure 44 Sensor Cell and ITM Mating

Under-Range Fault

Probable Cause: Sensor Baseline drifted lower, Interference gasses.

- Repeat AutoZero. Use Zero Air or N_2 source.
- Allow more time for zero stabilization if this is a biased sensor type.
- Execute successful AutoSpan and verify adequate Sensor Life.
- Check Raw counts in View Sensor Status. Should be close to 33,000 counts when normal.
- Replace plug-in sensor if fault continues.

Missing Sensor Fault

Probable Cause: Sensor is Missing, Failed Plug-in Sensor Electronics, or ITM I.S. Barrier Failure.

- Make sure plug-in sensor is plugged in properly with correct orientation.
- Swap plug-in sensor into another ITM to determine if plug-in sensor problem or ITM problem
- Replace the plug-in sensor if proven faulty
- Replace the ITM if proven faulty

AutoSpan Calibration Faults – (Range, Stability and Clearing)

To clear any AutoSpan Calibration fault, the AutoSpan process must be completed successfully (Section6.3.4).

Range Fault
Probable Causes: Failed Sensor, Cal Gas not applied or not applied at appropriate time, problems w/ cal gas and delivery.

- Check validity of span gas using pull tube or other means (check MFG date on cal gas cylinder).
- Use proper cal gas regulators and tubing for highly corrosive gasses
- If using Splashguard with Integral Cal Port, must use Calibration Wind Guard or air movement can compromise span gas delivery.
- Check for obstructions affecting cal gas hitting sensor face (including being wet, blocked, or corroded).
- Verify adequate Sensor Life
- Replace the plug-in toxic sensor.

Stability Fault
Probable Causes: Failed Sensor, empty or close to empty Cal Gas Cylinder, problems w/ cal gas and delivery.

- Check validity of span gas using pull tube or other means (check MFG date on cal gas cylinder).
- Use proper cal gas regulators and tubing for highly corrosive gasses
- If using Splashguard with Integral Cal Port, must use Calibration Wind Guard or air movement can compromise span gas delivery.
- Check for obstructions affecting cal gas hitting sensor face (including being wet, blocked, or corroded).
- Verify adequate Sensor Life
- Replace the plug-in toxic sensor.

Clearing Fault
Probable Causes: Failed Sensor, Cal Gas not removed at appropriate time, problems w/ cal gas and delivery, Background of Target Gas.

- Must recover to < 5% of range in < 5 min after AutoSpan is complete
- Use bottled air (zero air or N_2) if there is a known continuous background level.
- Check validity of span gas using pull tube or other means (check MFG date on cal gas cylinder).
- Use proper cal gas regulators and tubing for highly corrosive gasses
- Check for obstructions affecting cal gas hitting sensor face (including being wet, blocked, or corroded).
- Verify adequate Sensor Life
- Replace the plug-in toxic sensor.

Poor Calibration Repeatability
Probable Causes: Failed Sensor, use of wrong Cal Gas or problems w/ cal gas and delivery, Interference Gasses.

- Check for adequate Sensor Life.
- Check validity of span gas using pull tube or other means (check MFG date on cal gas cylinder).
- Use proper cal gas regulators and tubing for highly corrosive gasses
- Check for obstructions affecting cal gas hitting sensor face (including being wet, blocked, or corroded).

- Verify adequate Sensor Life
- Replace the plug-in toxic sensor.

Unstable Output/ Sudden spiking

Possible Causes: Unstable power supply, inadequate grounding, or inadequate RFI protection.

- Verify Power source is stable.
- Verify field wiring is properly shielded and grounded.
- Contact Detcon to optimize shielding and grounding.
- Add Detcon's RFI Protection Circuit accessory if problem is proven RFI induced.

Nuisance Alarms

Check condulet for accumulated water and abnormal corrosion on terminal blocks.

If nuisance alarms are happening at night, suspect condensation in condulet.

- Add or replace Detcon's Condensation Prevention Packet P/N 960-202200-000.
- Investigate the presence of other target gasses that are causing cross-interference signals.
- Determine if cause is RFI induced.

Processor and/or Memory Faults

- Recycle power in attempt to clear problem
- Restore Factory Defaults - This will clear the processor's memory and may correct problem.
- Remember to re-enter all customer settings for range and cal gas level after Restore Factory Defaults.
- If problem persists, replace the Intelligent Transmitter Module.

Unreadable Display

If due to excessive sunlight, install a sunshade to reduce glare.

Nothing Displayed – Transmitter not Responding

- Verify condulet has no accumulated water or abnormal corrosion.
- Verify required DC power is applied to correct terminals.
- Swap with a known-good ITM to determine if ITM is faulty.

Faulty 4-20 mA Output

If Sensor has a normal reading with no Faults displayed, and the 4-20 mA signal output is 0mA….

- Check that wiring is properly connected at terminal blocks and through to controller inputs.
- The 4-20 output loop must be closed (resistance of < 1000 ohms) to avoid the Loop Fault.
- Perform a "Signal Output Check" sequence via Section 6.3.5.5 and verify 4-20mA output with Current Meter.
- Swap with new ITM to determine if the ITM's 4-20mA output circuit is faulty. If the 4-20mA current loop is still out of tolerance, contact Detcon at Detcon-service@teledyne.com, or contact Detcon customer service.

No Communication - RS-485 Modbus™

If sensor has a normal reading with no Faults displayed and the Modbus™ is not communicating….

- Verify that the correct (and non-duplicated) serial address is entered (per Section 6.3.5.3).
- Check that the wiring is properly connected at terminal blocks, and the serial loop is wired correctly.
- Perform a "Signal Output Check" per Section 6.3.5.5 and troubleshoot wiring.
- Consider adding a Modbus™ repeater if the distance from the nearest distribution drop is excessive.
- Swap with new ITM to determine if the ITM's serial output circuit is faulty.
- Refer to Detcon's "Guide to Proper Modbus™ Communications" Application Note.

6.7 Customer Support and Service Policy

Detcon
Shipping Address: 4055 Technology Forest Blvd., The Woodlands Texas 77381
Mailing Address: P.O. Box 8067, The Woodlands Texas 77387-8067
Phone: 713.559.9200

- www.teledynegasandflamedetection.com
- detcon-service@teledyne.com
- detcon-sales@teledyne.com

All Technical Service and Repair activities should be handled by the Detcon Service Department via phone or email at contact information given above. RMA numbers should be obtained from the Detcon Service Department prior to equipment being returned. For on-line technical service, customers should have ready the model number, part number, and serial number of product(s) in question.

All Sales activities (including spare parts purchase) should be handled by the Detcon Sales Department via phone or email at contact information given above.

6.7.1 Warranty Notice

Teledyne Detcon Inc. warrants the Model DM-700 toxic gas sensors to be free from defects in workmanship of material under normal use and service for two years from the date of shipment on the ITM electronics and for the conditional warranty period on the intelligent plug-in sensor type as listed in the Warranty column of Table 12 on page164.

Teledyne Detcon Inc. will repair or replace without charge any such equipment found to be defective during the warranty period. Full determination of the nature of, and responsibility for, defective or damaged equipment will be made by Teledyne Detcon Inc. personnel.

Defective or damaged equipment must be shipped to the Teledyne Detcon Inc. factory or representative from which the original shipment was made. In all cases, this warranty is limited to the cost of the equipment supplied by Teledyne Detcon Inc. The customer will assume all liability for the misuse of this equipment by its employees or other contracted personnel.

All warranties are contingent upon the proper use in the application for which the product was intended and does not cover products which have been modified or repaired without Teledyne Detcon Inc. approval, or which have been subjected to neglect, accident, improper installation or application, or on which the original identification marks have been removed or altered.

Except for the express warranty stated above, Teledyne Detcon Inc. disclaims all warranties with regard to the products sold. Including all implied warranties of merchantability and fitness and the express warranties stated herein are in lieu of all obligations or liabilities on the part of Teledyne Detcon Inc. for damages including, but not limited to, consequential damages arising out of, or in connection with, the performance of the product.

6.8 DM-700 Sensor Warranty

Intelligent Plug-in Sensor Warranty

Teledyne Detcon Inc. warrants, under normal intended use, each new intelligent plug-in sensor per the period specified in the Warranty column of Table 12 (see page 164) and under the conditions described as follows: The warranty period begins on the date of shipment to the original purchaser. The sensor element is warranted to be free of defects in material and workmanship. Should any sensor fail to perform in accordance with published specifications within the warranty period, return the defective part to Detcon, Inc., 4055 Technology Forest Blvd., The Woodlands, Texas 77381, for necessary repairs or replacement.

Terms & Conditions

* The original serial number must be legible on each sensor element base.

* Shipping point is FOB the Detcon factory.

* Net payment is due within 30 days of invoice.

* Detcon, Inc. reserves the right to refund the original purchase price in lieu of sensor replacement.

ITM Electronics Warranty

Teledyne Detcon Inc. warrants, under intended normal use, each new Model 700 ITM to be free from defects in material and workmanship for a period of two years from the date of shipment to the original purchaser. All warranties and service policies are FOB the Detcon facility located in The Woodlands, Texas.

Terms & Conditions

* The original serial number must be legible on each ITM.

* Shipping point is FOB the Detcon factory.

* Net payment is due within 30 days of invoice.

* Detcon, Inc. reserves the right to refund the original purchase price in lieu of ITM replacement.

6.9 Appendix

6.9.1 System Specifications

Sensor Type:	Continuous diffusion/adsorption type 3-Electrode Electrochemical Sensor (2-Electrode for O_2) Plug-in Replaceable Intelligent Type
Sensor Life:	2 years typical
Measuring Ranges:	0-1 ppm up to 0-10,000 ppm (Toxic Gasses) 0-100 ppm up to 0-25% volume (O_2)
Accuracy/ Repeatability:	±10% of applied gas or +/- 2ppm, greater of (ISA 92.0.01 tested for H_2S) ±2% of full-range (other Toxic Gasses) ±1% of full-range (O_2)
Response Time:	T90 < 30 seconds typical (See Sensor Table)
Performance Testing:	Complies with ISA 92.00.01 Part 1-2010; Performance Requirements for H_2S (with specific H_2S sensor type)
Approvals:	$_{C}CSA_{US}$, ATEX, CE Marking
Warranty:	Electronics – 2 years Sensor – (See Table 12)

Environmental Specifications

Operating Temperature:	-40°C to +55°C typical (See Table 12) (ISA 92.00.01 tested from -40°C to +55°C for H_2S)
Storage Temperature:	-35°C to +55°C typical
Operating Humidity:	10-95% RH Continuous Duty (See Table 12) (ISA 92.00.01 tested to 5-95% RH for H_2S) 0-100% RH Short-Term Duration Only
Operating Pressure:	Ambient ± 10%
Air Velocity:	0-5 meters/second

Electrical Specifications

Input Voltage:	11-30 VDC
Power Consumption:	Normal operation = 30mA (<0.75 watt); Maximum = 50mA (1.2 watts) Inrush Current = 1.67A @ 24V
RFI/EMI Protection:	Complies with EN50270:2015
Analog Output:	Linear 4-20mA DC current 1000 ohms maximum loop load @ 24VDC 0 mA All Fault Diagnostics 2 mA In-Calibration 4-20 mA 0-100% full-scale 22 mA Over-range condition
Serial Output:	RS-485 Modbus™ RTU Baud Rate 9600 BPS (9600,N,8,1 Half Duplex)
Status Indicators:	4-digit LED Display with gas concentration, full-script menu prompts for AutoSpan, Set-up Options, and Fault Reporting
Faults Monitored:	Loop Fault, Input Voltage Fault, Missing Sensor Fault, Zero Fault, Processor Fault, Memory Fault, Calibration Fault(s)
Cable Requirements:	Power/Analog: 3-wire shielded cable Maximum distance is 13,300 feet with 14 AWG Serial Output: 2-wire twisted-pair shielded cable specified for RS-485 use Maximum distance is 4,000 feet to last sensor

Mechanical Specifications

Length:	7.6 inches (190 mm), Includes Splashguard
Width:	2.2 inches (55 mm)
Weight:	2.5 lbs (1.2 Kg)
Mechanical Connection:	¾” Male NPT threaded connection
Electrical Connection:	Five 18 gauge wire leads - 5.5” long

Table 12 Sensor Specific Data

Gas	GasName	Part Number[1]	Response Time (seconds)	SpanDrift	Temperature Range °C	Humidity Range%	Warranty
O_2	Oxygen	377-343401-025	T95<30	<5%signal loss/year	-20 to+50	15 to 90	2 years
C_2H_3O	Acetaldehyde	377-12EA01-100	T90<140	<5%signal loss/year	-20 to+50	15 to 90	2 years
C_2H_2	Acetylene	377-12EG01-100	T90<140	<5%signal loss/year	-20 to+50	15 to 90	2 years
C_3H_3N	Acrylonitrile	377-12EM01-100	T90<140	<5%signal loss/year	-20 to+50	15 to 90	2 years
NH_3	Ammonia	377-505001-100	T90<90	<2%signal loss/month	-40 to+50	15 to 90	2 years
AsH_3	Arsine	377-191901-001	T90<60	<5%signal loss/month	-20 to+40	20 to 95	1.5 years
Br_2	Bromine	377-747501-005	T90<60	<2%signal loss/month	-20 to+50	15 to 90	2 years
C_4H_6	Butadiene	377-12EB01-100	T90<140	<5%signal loss/year	-20 to+50	15 to 90	2 years
CO	Carbon Monoxide	377-444401-100	T90=30	<5%signal loss/year	-40 to+50	15 to 90	3 years
Cl_2	Chlorine	377-747401-010	T90<60	<2%signal loss/month	-20 to+50	15 to 90	2 years
ClO_2 (>10ppm)	Chlorine Dioxide	377-777701-001	T90<60	<2%signal loss/month	-20 to+50	15 to 90	2 years
ClO_2 (<=10ppm)	Chlorine Dioxide	377-282801-050	T90<120	<1%signal loss/month	-20 to+40	10 to 95	2 years
B_2H_6	Diborane	377-192101-005	T90<60	<5%signal loss/month	-20 to+40	20 to 95	1.5 years
C_2H_5OH	Ethanol	377-12EO01-100	T90<140	<5%signal loss/year	-20 to+50	15 to 90	2 years
C_2H_5SH	Ethyl Mercaptan	377-24EZ01-100	T90<45	<2%signal loss/month	-40 to+50	15 to 90	2 years
C_2H_4	Ethylene	377-12ED01-100	T90<140	<5%signal loss/year	-20 to+50	15 to 90	2 years
C_2H_4O	Ethylene Oxide	377-12EJ01-100	T90<140	<5%signal loss/year	-20 to+50	15 to 90	2 years
F_2	Fluorine	377-272701-001	T90<80	<5%signal loss/year	-10 to+40	10 to 95	1.5 years
CH_2O	Formaldehyde	377-12EP01-100	T90<140	<5%signal loss/year	-20 to+50	15 to 90	2 years
GeH_4	Germane	377-232501-002	T90<60	<1%signal loss/month	-20 to+40	20 to 95	1.5 years
N_2H_4	Hydrazine	377-262601-001	T90<120	<5%signal loss/month	-10 to+40	10 to 95	1 year
H_2 (ppm)	Hydrogen	377-848401-100	T90=30	<2%signal loss/month	-20 to+50	15 to 90	2 years
H_2 (LEL)*	Hydrogen	377-050501-04P	T90<60	<2%signal loss/month	-40 to+40	5 to 95	2 years
HBr	Hydrogen Bromide	377-090801-030	T90<70	<3%signal loss/month	-20 to+40	10 to 95	1.5 years
HCl	Hydrogen Chloride	377-090901-030	T90<70	<2%signal loss/month	-20 to+40	10 to 95	1.5 years
HCN	Hydrogen Cyanide	377-131301-030	T90<40	<5%signal loss/month	-40 to+40	5 to 95	2 years
HF	Hydrogen Fluoride	377-333301-010	T90<90	<10%signal loss/month	-20 to+35	10 to 80	1.5 years

[1] The last three digits of the Part Number are the range of the sensor cell. I.E. "-100" is a 100ppm range.

Gas	GasName	Part Number[1]	Response Time (seconds)	SpanDrift	Temperature Range °C	Humidity Range%	Warranty
H_2S	Hydrogen Sulfide	377-242401-100	T80<30	<2%signal loss/month	-40 to+50	15 to 90	2 years
H_2S (Hi Temp)	Hydrogen Sulfide	377-303001-100	T90<30	<±2%FSD/year	-30 to+70	0 to 95	2 years
CH_3OH	Methanol	377-12EE01-100	T90<140	<5%signal loss/year	-20 to+50	15 to 90	2 years
CH_3SH	Methyl Mercaptan	377-24EK01-100	T90<45	<2%signal loss/month	-40 to+50	15 to 90	2 years
NO	Nitric Oxide	377-949401-100	T90=10	<2%signal loss/month	-20 to+50	15 to 90	3 years
NO_2	Nitrogen Dioxide	377-646401-010	T90<40	<2%signal loss/month	-20 to+50	15 to 90	2 years
O_3	Ozone	377-999901-001	T90<120	<1%signal loss/month	-10 to+40	10 to 95	2 years
$COCl_2$	Phosgene	377-414101-001	T90<120	<1%signal loss/month	-20 to+40	10 to 95	1.5 years
PH3	Phosphine	377-192001-005	T90<30	<1%signal loss/month	-20 to+40	20 to 95	1.5 years
SiH_4	Silane	377-232301-050	T90<60	<1%signal loss/month	-20 to+40	20 to 95	1.5 years
SO_2	Sulfur Dioxide	377-555501-020	T90=20	<2%signal loss/month	-20 to+50	15 to 90	2 years
$C_4H_6O_2$	Vinyl Acetate	377-12EF01-100	T90<140	<5%signal loss/year	-20 to+50	15 to 90	2 years
C_2H_3Cl	Vinyl Chloride	377-12EL01-100	T90<140	<5%signal loss/year	-20 to+50	15 to 90	2 years

6.9.2 Interference Table

Reference Table 13 to match the interfering gas symbol with the gas name. Then refer to Table 14. The Cross Interfering Gas Table extends for 5 pages, with each sensor specific gas repeated in each section of the table, for a column listing of 40 gasses. The list is followed by a row of 14 possible interfering gasses per page. Review each page for the applicable sensor gas and then scan across the row for possible interference gasses.

Table 13 Interfering Gasses

Acetaldehyde	C_2H_3O	Dimethyl Sulfide	C_2H_6S	Methane	CH_4
Acetylene	C_2H_2	Disilane	Si_2H_6	Methanol	CH_3OH
Acrylonitrile	C_3H_3N	Epichlorohydrin	C_3H_5OCl	Methyl-ethyl-ketone	C_4H_8O
Alcohols	Alcohols	Ethanol	C_2H_5OH	Methyl Mercaptan	CH_3SH
Amines	Amines	Ethyl Mercaptan	C_2H_5SH	Nitric Oxide	NO
Ammonia	NH_3	Ethylene	C_2H_4	Nitrogen	N_2
Arsenic Trifluoride	AsF_3	Ethylene Oxide	C_2H_4O	Nitrogen Dioxide	NO_2
Arsenic Pentafluoride	AsF_5	Fluorine	F_2	Ozone	O_3
Arsine	AsH_3	Formaldehyde	CH_2O	Phosgene	$COCl_2$
Boron Trifluoride	BF_3	Germane	GeH_4	Phosphine	PH_3
Bromine	Br_2	Hydrazine	N_2H_4	Phosphorous Trifluoride	PF_3
Butadiene	C_4H_6	Hydrocarbons	C-H's	Silane	SiH_4
Buten-1	Buten-1	Hydrocarbons (unsaturated)	C-H's (µ)	Silicon	Si
Carbon Dioxide	CO_2	Hydrogen	H_2	Silicon Tetra Fluoride	SiF_4
Carbon Disulfide	CS_2	Hydrogen Bromide	HBr	Sulfur Dioxide	SO_2
Carbon Oxide Sulfide	COS	Hydrogen Chloride	HCl	Tetrahydrothiophene	C_4H_8S
Carbon Monoxide	CO	Hydrogen Cyanide	HCN	Thiophane	C_4H_4S
Carbonyl Sulfide	CS	Hydrogen Fluoride	HF	Toluene	$C_6H_5CH_3$
Chlorine	Cl_2	Hydrogen Selenide	HSe	Tungsten Hexafluoride	WF_6
Chlorine Dioxide	ClO_2	Hydrogen Sulfide	H_2S	Vinyl Acetate	$C_4H_6O_2$
Chlorine Trifluoride	ClF_3	Dimethyl Sulfide	C_2H_6S	Vinyl Chloride	C_2H_3Cl
Diborane	B_2H_6	Disilane	Si_2H_7		

Table 14 Cross Interference Table pg.1

Gas	C_2H_3O	C_2H_2	C_3H_3N	Alcohols	Amines	NH_3	AsF_3	AsF_5	AsH_3	BF_3	Br_2	C_4H_6	Buten-1
C_2H_3O	n/a	40=340	40=75	n/d	n/d	n/d	n/d	n/d	n/d	n/d	n/d	40=170	n/d
C_2H_2	340=40	n/a	340=75	n/d	n/d	n/d	n/d	n/d	n/d	n/d	n/d	340=170	n/d
C_3H_3N	75=40	75=340	n/a	n/d	n/d	n/d	n/d	n/d	n/d	n/d	n/d	75=170	n/d
NH_3	n/d	n/d	n/d	n/d	n/d	n/d	n/d	n/d	n/d	n/d	n/d	n/d	n/d
AsH_3	n/d	n/d	n/d	n/d	n/d	100=0.01	n/d	n/d	n/a	n/d	n/d	n/d	n/d
Br_2	n/d	n/d	n/d	n/d	n/d	n/d	n/d	n/d	n/d	n/d	n/a	n/d	n/d
C_4H_6	170=40	170=340	170=75	n/d	n/d	n/d	n/d	n/d	n/d	n/d	n/d	n/a	n/d
CS_2	140=40	140=340	140=75	n/d	n/d	n/d	n/d	n/d	n/d	n/d	n/d	140=170	n/d
CO	n/d	n/d	n/d	n/d	n/d	n/d	n/d	n/d	n/d	n/d	n/d	n/d	n/d
Cl_2	n/d	n/d	n/d	n/d	n/d	n/d	n/d	n/d	n/d	n/d	1=0.55	n/d	n/d
ClO_2 (>10ppm)	n/d	n/d	n/d	n/d	n/d	n/d	n/d	n/d	n/d	n/d	1=0.18	n/d	n/d
ClO_2 (=10ppm)	n/d	n/d	n/d	n/d	n/d	n/d	n/d	n/d	n/d	n/d	n/d	n/d	n/d
B_2H_6	n/d	n/d	n/d	n/d	n/d	100=0.013	n/d	n/d	0.15=0.2	n/d	n/d	n/d	n/d
C_3H_5OCl	50=40	50=340	50=75	n/d	n/d	n/d	n/d	n/d	n/d	n/d	n/d	50=170	n/d
C_2H_5OH	180=40	180=340	180=75	n/d	n/d	n/d	n/d	n/d	n/d	n/d	n/d	180=170	n/d
C_2H_5SH	n/d	n/d	n/d	n/d	n/d	n/d	n/d	n/d	n/d	n/d	n/d	n/d	n/d
C_2H_4	220=40	220=340	220=75	n/d	n/d	n/d	n/d	n/d	n/d	n/d	n/d	220=170	n/d
C_2H_4O	275=40	275=340	275=75	n/d	n/d	n/d	n/d	n/d	n/d	n/d	n/d	275=170	n/d
F_2	n/d	n/d	n/d	1000=0	n/d	n/d	n/d	n/d	0.1=0	n/d	yes n/d	n/d	n/d
CH_2O	330=40	330=340	330=75	n/d	n/d	n/d	n/d	n/d	n/d	n/d	n/d	330=170	n/d
GeH_4	n/d	n/d	n/d	n/d	n/d	100=<1	n/d	n/d	0.2=0.14	n/d	n/d	n/d	n/d
N_2H_4	n/d	n/d	n/d	1000=0	n/d	200=0.04	n/d	n/d	0.1=0.1	n/d	n/d	n/d	n/d
H_2 (ppm)	n/d	n/d	n/d	n/d	n/d	n/d	n/d	n/d	n/d	n/d	n/d	n/d	n/d
H_2 (LEL)	n/d	n/d	n/d	n/d	n/d	100=0	n/d	n/d	n/d	n/d	n/d	n/d	n/d
HBr	n/d	n/d	n/d	1000=0	no	n/d	n/d	n/d	0.1=0.3	n/d	n/d	n/d	n/d
HCl	n/d	n/d	n/d	1000=0	no	n/d	n/d	n/d	0.1=0.3	n/d	n/d	n/d	n/d
HCN	n/d	n/d	n/d	1000=0	n/d	n/d	n/d	n/d	0.1=0	n/d	yes n/d	n/d	n/d
HF	n/d	n/d	n/d	1000=0	n/d	n/d	yes n/d	yes n/d	0.1=0	yes n/d	n/d	n/d	n/d

H_2S	n/d	n/d	n/d	n/d	n/d	n/d	n/d	n/d	n/d	n/d	n/d	n/d	n/d
H_2S (Hi Temp)	n/d	n/d	n/d	n/d	n/d	n/d	n/d	n/d	n/d	n/d	n/d	n/d	n/d
CH_3OH	415=40	415=340	415=75	n/d	n/d	n/d	n/d	n/d	n/d	n/d	n/d	415=170	n/d
CH_3SH	n/d	n/d	n/d	n/d	n/d	n/d	n/d	n/d	n/d	n/d	n/d	275=170	n/d
NO	n/d	n/d	n/d	n/d	n/d	n/d	n/d	n/d	n/d	n/d	n/d	n/d	n/d
NO_2	n/d	n/d	n/d	n/d	n/d	n/d	n/d	n/d	n/d	n/d	n/d	n/d	n/d
O_3	n/d	n/d	n/d	n/d	n/d	n/d	n/d	n/d	0.1=0.05	n/d	yes n/d	n/d	n/d
$COCl_2$	n/d	n/d	n/d	1000=0	n/d	50=0.5	n/d	n/d	n/d	n/d	n/d	n/d	n/d
PH_3	n/d	n/d	n/d	n/d	n/d	100=0.01	n/d	n/d	1=1	n/d	n/d	n/d	n/d
SiH_4	n/d	n/d	n/d	n/d	n/d	100=<1	n/d	n/d	0.2=0.14	n/d	n/d	n/d	n/d
SO_2	n/d	n/d	n/d	n/d	n/d	n/d	n/d	n/d	n/d	n/d	n/d	n/d	n/d
$C_4H_6O_2$	200=40	200=340	200=75	n/d	n/d	n/d	n/d	n/d	n/d	n/d	n/d	200=170	n/d
C_2H_3Cl	200=40	200=340	200=75	n/d	n/d	n/d	n/d	n/d	n/d	n/d	n/d	200=170	n/d

n/a – not applicable

n/d – no data

Table 6 Cross Interference Gasses pg.2

Gas	CO_2	CS_2	CO	COS	CL_2	CLO_2	CLF_3	B_2H_6	C_2H_6S	Si_2H_6	C_3H_5OCL	C_2H_5OH	F_2
C_2H_3O	n/d	40=140	40=100	40=135	n/d	n/d	n/d	n/d	40=150	n/d	40=50	40=180	n/d
C_2H_2	n/d	340=140	340=100	340=135	n/d	n/d	n/d	n/d	340=150	n/d	340=50	340=180	n/d
C_3H_3N	n/d	75=140	75=100	75=135	n/d	n/d	n/d	n/d	75=150	n/d	75=50	75=180	n/d
NH_3	n/d	n/d	300=8	n/d	1=-1	10%=-15	n/d	n/d	n/d	n/d	n/d	n/d	n/d
AsH_3	5000=0	n/d	300=0	n/d	0.5=-0.04	n/d	n/d	0.2=0.15	n/d	5=yes n/d	n/d	n/d	n/d
Br_2	n/d	n/d	300=0	n/d	1=2	1=6	n/d	n/d	n/d	n/d	n/d	n/d	n/d
C_4H_6	n/d	170=140	170=100	170=135	n/d	n/d	n/d	n/d	170=150	n/d	170=50	170=180	n/d
CS_2	n/d	n/a	140=100	140=135	n/d	n/d	n/d	n/d	140=150	n/d	140=50	140=180	n/d
CO	n/d	n/d	n/a	n/d	1=0	n/d	n/d	n/d	n/d	n/d	n/d	200=0	n/d
Cl_2	n/d	n/d	300=0	n/d	n/a	n/d	n/d	n/d	n/d	n/d	n/d	n/d	n/d
ClO_2 (>10ppm)	n/d	n/d	300=0	n/d	3=1	n/a	n/d	n/d	n/d	n/d	n/d	n/d	n/d
ClO_2 (=10ppm)	5000=0	n/d	1000=0	n/d	1=0.9	n/a	yes n/d	0.1=0	n/d	n/d	n/d	n/d	yes n/d
B_2H_6	5000=0	n/d	300=0	n/d	0.5=-0.05	n/d	n/d	n/a	n/d	5=yes n/d	n/d	n/d	n/d
C_3H_5OCl	n/d	50=140	50=100	50=135	n/d	n/d	n/d	n/d	50=150	n/d	n/a	50=180	n/d
C_2H_5OH	n/d	180=140	180=100	180=135	n/d	n/d	n/d	n/d	180=150	n/d	180=50	n/a	n/d
C_2H_5SH	n/d	n/d	300=5	n/d	1=-0.6	n/d	n/d	n/d	n/d	n/d	n/d	n/d	n/d
C_2H_4	n/d	220=140	220=100	220=135	n/d	n/d	n/d	n/d	220=150	n/d	220=50	220=180	n/d
C_2H_4O	n/d	275=140	275=100	275=135	n/d	n/d	n/d	n/d	275=150	n/d	275=50	275=180	n/d
F_2	5000=0	n/d	1000=0	n/d	1=1.3	n/d	n/d	n/d	n/d	n/d	n/d	n/d	n/a
CH_2O	n/d	330=140	330=100	330=135	n/d	n/d	n/d	n/d	330=150	n/d	330=50	330=180	n/d
GeH_4	5000=0	n/d	300=0	n/d	0.5=-0.04	n/d	n/d	0.2=0.11	n/d	5=yes n/d	n/d	n/d	n/d
N_2H_4	5000=0	n/d	1000=0	n/d	1=0	n/d	n/d	n/d	n/d	n/d	n/d	n/d	n/d
H_2 (ppm)	n/d	n/d	300=<30	n/d	1=0	n/d	n/d	n/d	n/d	n/d	n/d	n/d	n/d
H_2 (LEL)	1000=0	n/d	50=6	n/d	5=0	n/d	n/d	n/d	n/d	n/d	n/d	n/d	n/d
HBr	5000=0	n/d	1000=0	n/d	5=1	n/d	yes n/d	n/d	n/d	n/d	n/d	n/d	n/d
HCl	5000=0	n/d	1000=0	n/d	5=1	n/d	1=yes n/d	n/d	n/d	n/d	n/d	n/d	n/d
HCN	5000=0	n/d	1000=0	n/d	5=-1	n/d	n/d	n/d	n/d	n/d	n/d	n/d	n/d
HF	5000=0	n/d	1000=0	n/d	1=0.4	n/d	yes n/d	0.1=0	n/d	n/d	n/d	n/d	yes n/d

H_2S	n/d	n/d	300==1.5	n/d	1=¯-0.2	n/d	n/d	n/d	n/d	n/d	n/d	n/d	n/d
H_2S (Hi Temp)	5000=0	n/d	300<6	n/d	1=0	n/d	n/d	n/d	n/d	n/d	n/d	n/d	n/d
CH_3OH	n/d	415=140	415=100	415=135	n/d	n/d	n/d	n/d	415=150	n/d	415=50	415=180	n/d
CH_3SH	n/d	n/d	300=3	n/d	1=-0.4	n/d	n/d	n/d	n/d	n/d	n/d	n/d	n/d
NO	n/d	n/d	300=0	n/d	1=0	n/d	n/d	n/d	n/d	n/d	n/d	n/d	n/d
NO_2	n/d	n/d	300=0	n/d	1=¯1	n/d	n/d	n/d	n/d	n/d	n/d	n/d	n/d
O_3	5000=0	n/d	300=0	n/d	1=1.4	0.1=0.12	1=1(theory)	n/d	n/d	n/d	n/d	n/d	0.1=0.07
$COCl_2$	5000=0	n/d	1000=0	n/d	1=0	n/d	n/d	n/d	n/d	n/d	n/d	n/d	n/d
PH_3	5000=0	n/d	300=0	n/d	0.5=-0.04	n/d	n/d	0.2=0.15	n/d	5=yes n/d	n/d	n/d	n/d
SiH_4	5000=0	n/d	300=0	n/d	0.5=-0.04	n/d	n/d	0.2=0.11	n/d	5=yes n/d	n/d	n/d	n/d
SO_2	n/d	n/d	300=<5	n/d	1=<0.5	n/d	n/d	n/d	n/d	n/d	n/d	n/d	n/d
$C_4H_6O_2$	n/d	200=140	200=100	200=135	n/d	n/d	n/d	n/d	200=150	n/d	200=50	200=180	n/d
C_2H_3Cl	n/d	200=140	200=100	200=135	n/d	n/d	n/d	n/d	200=150	n/d	200=50	200=180	n/d

n/a – not applicable

n/d – no data

Table 6 Cross Interference Gasses pg.3

Gas	C_2H_4	C_2H_4O	CH_2O	GeH_4	N_2H_4	C-H's	C-H's (U)	H_2	HBr	HCL	HCN	HF	I_2
C_2H_3O	40=220	40=275	40=330	N/d	n/d	n/d	n/d	n/d	n/d	n/d	n/d	n/d	n/d
C_2H_2	340=220	340=275	340=330	N/d	n/d	n/d	n/d	n/d	n/d	n/d	n/d	n/d	n/d
C_3H_3N	75=220	75=275	75=330	N/d	n/d	n/d	n/d	n/d	n/d	n/d	n/d	n/d	n/d
NH_3	100=0	n/d	n/d	N/d	n/d	n/d	n/d	200=4	n/d	5=-3	10=0	n/d	n/d
AsH_3	n/d	n/d	n/d	1=0.4	n/d	%range=0	n/d	3000=0	n/d	5=0	10=0.1	4=0	n/d
Br_2	100=0	n/d	n/d	N/d	n/d	n/d	n/d	100=0	n/d	5=0	10=0	n/d	n/d
C_4H_6	170=220	170=275	170=330	N/d	n/d	n/d	n/d	n/d	n/d	n/d	n/d	n/d	n/d
CS_2	140=220	140=275	140=330	N/d	n/d	n/d	n/d	n/d	n/d	n/d	n/d	n/d	n/d
CO	100=<100	n/d	n/d	N/d	n/d	n/d	n/d	100=<60	n/d	5=0	10=<2	n/d	n/d
Cl_2	100=0	n/d	n/d	N/d	n/d	n/d	n/d	100=0	n/d	5=0	10=0	n/d	n/d
ClO_2 (>10ppm)	100=0	n/d	n/d	N/d	n/d	n/d	n/d	100=0	n/d	5=0	10=0	n/d	n/d
ClO_2 (=10ppm)	n/d	n/d	n/d	1=0	n/d	%range=0	n/d	1%=0	n/d	n/d	n/d	n/d	n/d
B_2H_6	n/d	n/d	n/d	1=0.53	n/d	%range=0	n/d	3000=0	n/d	5=0	10=0.13	4=0	n/d
C_3H_5OCl	50=220	50=275	50=330	N/d	n/d	n/d	n/d	n/d	n/d	n/d	n/d	n/d	n/d
C_2H_5OH	180=220	180=275	180=330	N/d	n/d	n/d	n/d	n/d	n/d	n/d	n/d	n/d	n/d
C_2H_5SH	100=0	n/d	n/d	N/d	n/d	n/d	n/d	1%=<15	n/d	5=0	10=0	n/d	n/d
C_2H_4	n/a	220=275	220=330	n/d	n/d	n/d	n/d	n/d	n/d	n/d	n/d	n/d	n/d
C_2H_4O	275=220	n/a	275=330	n/d	n/d	n/d	n/d	n/d	n/d	n/d	n/d	n/d	n/d
F_2	n/d	n/d	n/d	n/d	n/d	%range=0	n/d	1%=0	n/d	5=0	1=-3	3=0	n/d
CH_2O	330=220	330=275	n/a	n/d	n/d	n/d	n/d	n/d	n/d	n/d	n/d	n/d	n/d
GeH_4	n/d	n/d	n/d	n/a	n/d	%range=0	n/d	3000=0	n/d	5=0	10=1	4=0	n/d
N_2H_4	n/d	n/d	n/d	n/d	n/a	%range=0	n/d	1000=0	n/d	5=0.1	n/d	3=0	n/d
H_2 (ppm)	100=˜80	n/d	n/d	n/d	n/d	n/d	n/d	n/a	n/d	5=0	10=˜3	n/d	n/d
H_2 (LEL)	yes n/d	n/d	n/d	n/d	n/d	n/d	n/d	n/a	n/d	n/d	10=0	n/d	n/d
HBr	n/d	n/d	n/d	n/d	n/d	%range=0	n/d	1%=0	n/a	1=1	15=1	3=0	n/d
HCl	n/d	n/d	n/d	1=n/d	n/d	%range=0	n/d	1%=0	1=1	n/a	15=1	3=0	n/d

HCN	n/d	n/d	n/d	n/d	n/d	%range=0	n/d	1000=0	n/d	5=0	n/a	3=0	n/d
HF	n/d	n/d	n/d	1=0	n/d	%range=0	n/d	1%=0	n/d	5=3.3	n/d	n/a	n/d
H_2S	100=0	n/d	n/d	n/d	n/d	n/d	n/d	1%=<5	n/d	5=0	10=0	n/d	n/d
H_2S (Hi Temp)	100=0	n/d	n/d	n/d	n/d	n/d	n/d	500<1	n/d	n/d	n/d	n/d	n/d
CH_3OH	415=220	415=275	415=330	n/d	n/d	n/d	n/d	n/d	n/d	n/d	n/d	n/d	n/d
CH_3SH	100=0	n/d	n/d	n/d	n/d	n/d	n/d	1%=<10	n/d	5=0	10=0	n/d	n/d
NO	100=0	n/d	n/d	n/d	n/d	n/d	n/d	100=0	n/d	5=<1	10=0	n/d	n/d
NO_2	100=0	n/d	n/d	n/d	n/d	n/d	n/d	100=0	n/d	5=0	10=0	n/d	n/d
O_3	n/d	n/d	n/d	n/d	n/d	n/d	n/d	1%=0.003	n/d	10=0	10=0.03	5=0	yes n/d
$COCl_2$	n/d	n/d	n/d	n/d	n/d	%range=0	n/d	1%=0	n/d	5=0	5=0	3=0	n/d
PH_3	n/d	n/d	n/d	1=0.4	n/d	%range=0	n/d	3000=0	n/d	5=0	10=0.1	4=0	n/d
SiH_4	n/d	n/d	n/d	1=1.0	n/d	%range=0	n/d	3000-=0	n/d	5=0	10=1	4=0	n/d
SO_2	100=0	n/d	n/d	n/d	n/d	n/d	n/d	100=0	n/d	5=0	10=<5	n/d	n/d
$C_4H_6O_2$	200=220	200=275	200=330	n/d	n/d	n/d	n/d	n/d	n/d	n/d	n/d	n/d	n/d
C_2H_3Cl	200=220	200=275	200=330	n/d	n/d	n/d	n/d	n/d	n/d	n/d	n/d	n/d	n/d

n/a – not applicable

n/d – no data

Table 6 Cross Interference Gasses pg.4

Gas	HSe	H_2S	C_3H_8O	CH_4	CH_3OH	C_4H_8O	CH_3SH	NO	N_2	NO_2	O_3	$COCL_2$	PH_3
C_2H_3O	n/d	n/d	n/d	n/d	40=415	n/d	40=275	n/d	n/d	n/d	n/d	n/d	n/d
C_2H_2	n/d	n/d	n/d	n/d	340=415	n/d	340=275	n/d	n/d	n/d	n/d	n/d	n/d
C_3H_3N	n/d	n/d	n/d	n/d	75=415	n/d	75=275	n/d	n/d	n/d	n/d	n/d	n/d
NH_3	n/d	15=30	n/d	n/d	n/d	n/d	n/d	35=6	n/d	5=-1	n/d	n/d	n/d
AsH_3	0.05=0.005	1=0	n/d	n/d	n/d	n/d	n/d	n/d	100%=0	n/d	n/d	n/d	0.1=0.11
Br_2	n/d	15=-1.5	n/d	n/d	n/d	n/d	n/d	35=0	n/d	5=¯10	n/d	n/d	n/d
C_4H_6	n/d	n/d	n/d	n/d	170=415	n/d	170=275	n/d	n/d	n/d	n/d	n/d	n/d
CS_2	n/d	n/d	n/d	n/d	140=415	n/d	140=275	n/d	n/d	n/d	n/d	n/d	n/d
CO	n/d	15=<0.3	n/d	n/d	n/d	n/d	n/d	35==7	n/d	5=0.5	n/d	n/d	n/d
Cl_2	n/d	15=-0.75	n/d	n/d	n/d	n/d	n/d	35=0	n/d	5=¯5	n/d	n/d	n/d
ClO_2 (>10ppm)	n/d	15=0.25	n/d	n/d	n/d	n/d	n/d	35=0	n/d	5=1.66	n/d	n/d	n/d
ClO_2 (=10ppm)	n/d	10=-0.015	n/d	n/d	n/d	n/d	n/d	n/d	n/d	yes n/d	yes n/d	n/d	n/d
B_2H_6	0.05=0.006	1=0	n/d	n/d	n/d	n/d	n/d	n/d	100%=0	n/d	n/d	n/d	0.1=0.14
C_3H_5OCl	n/d	n/d	n/d	n/d	50=415	n/d	50=275	n/d	n/d	n/d	n/d	n/d	n/d
C_2H_5OH	n/d	n/d	n/d	n/d	180=415	n/d	180=275	n/d	n/d	n/d	n/d	n/d	n/d
C_2H_5SH	n/d	1:03	n/d	n/d	n/d	n/d	5=8	35=<6	n/d	5=-1.5	n/d	n/d	n/d
C_2H_4	n/d	n/d	n/d	n/d	220=415	n/d	220=275	n/d	n/d	n/d	n/d	n/d	n/d
C_2H_4O	n/d	n/d	n/d	n/d	275=415	n/d	275=275	n/d	n/d	n/d	n/d	n/d	n/d
F_2	n/d	1=-1.5	n/d	n/d	n/d	n/d	n/d	n/d	100%=0	1=0.05	0.1=0.2	n/d	n/d
CH_2O	n/d	n/d	n/d	n/d	330=415	n/d	330=275	n/d	n/d	n/d	n/d	n/d	n/d
GeH_4	0.05=0.005	1=0	n/d	n/d	n/d	n/d	n/d	n/d	100%=0	n/d	n/d	n/d	0.1=0.13
N_2H_4	n/d	1=0.1	n/d	n/d	n/d	n/d	n/d	n/d	100%=0	1=-0.25	0.1=-0.1	n/d	0.3=0.1
H_2 (ppm)	n/d	15=<3	n/d	n/d	n/d	n/d	n/d	35=¯10	n/d	5=0	n/d	n/d	n/d
H_2 (LEL)	n/d	n/d	yes n/d	1%=0	n/d	n/d	n/d	yes n/d	n/d	10=0	n/d	n/d	n/d

HBr	0.1=0	10=2.75	n/d	n/d	n/d	n/d	n/d	n/d	100%=0	n/d	n/d	0.1=0	0.1=0.3
HCl	0.1=0	10=2.75	n/d	n/d	n/d	n/d	n/d	n/d	100%=0	n/d	n/d	0.1=0	0.1=0.3
HCN	n/d	10=0	n/d	n/d	n/d	n/d	n/d	n/d	100%=0	10=-12	0.1=0	n/d	0.3=0
HF	n/d	10=0	n/d	n/d	n/d	n/d	n/d	n/d	100%=0	10¯0.1	n/d	n/d	0.1=0
H_2S	n/d	n/a	n/d	n/d	n/d	n/d	2:01	35=<2	n/d	5=-0.5	n/d	n/d	n/d
H_2S (Hi Temp)	n/d	n/d	n/d	n/d	5=<1	n/d	n/d	n/d	n/d	n/d	n/d	n/d	n/d
CH_3OH	n/d	n/d	n/d	n/d	n/a	n/d	415=275	n/d	n/d	n/d	n/d	n/d	n/d
CH_3SH	n/d	1:02	n/d	n/d	n/d	n/d	n/a	35=<4	n/d	5=-1.0	n/d	n/d	n/d
NO	n/d	15=¯5	n/d	n/d	n/d	n/d	n/d	100=0	n/d	5=<1.5	n/d	n/d	n/d
NO_2	n/d	15=-0.75	n/d	n/d	n/d	n/d	n/d	35=0	n/d	n/a	n/d	n/d	n/d
O_3	n/d	1=-.015	n/d	n/d	n/d	n/d	n/d	10=0	100%=0	1=0.7	n/a	n/d	0.3=0.03
$COCl_2$	n/d	1=0	n/d	n/d	n/d	n/d	n/d	n/d	100%=0	n/d	n/d	n/a	0.3=0
PH_3	0.05=0.005	1=0	n/d	n/d	n/d	n/d	n/d	n/d	100%=0	n/d	n/d	n/d	n/a
SiH_4	0.05=0.005	1=0	n/d	n/d	n/d	n/d	n/d	n/d	100%=0	n/d	n/d	n/d	0.1=0.13
SO_2	n/d	15=0	n/d	n/d	n/d	n/d	n/d	35=0	n/d	5=¯-5	n/d	n/d	n/d
$C_4H_6O_2$	n/d	n/d	n/d	n/d	200=415	n/d	200=275	n/d	n/d	n/d	n/d	n/d	n/d
C_2H_3Cl	n/d	n/d	n/d	n/d	200=415	n/d	200=275	n/d	n/d	n/d	n/d	n/d	n/d

n/a – not applicable

n/d – no data

Table 6 Cross Interference Gasses pg.5

Gas	PF_3	SiH_4	Si	SiF_4	SO_2	C_4H_8S	C_4H_4S	C_6H5CH_3	WF_6	$C_4H_6O_2$	C_2H_3CL	C_2H_5SH	$C_6H_5CH_3$
C_2H_3O	n/d	n/d	n/d	n/d	n/d	n/d	40=45	n/d	n/d	40=200	40=200	n/d	40=55
C_2H_2	n/d	n/d	n/d	n/d	n/d	n/d	340=45	n/d	n/d	340=200	340=200	n/d	340=55
C_3H_3N	n/d	n/d	n/d	n/d	n/d	n/d	75=45	n/d	n/d	75=200	75=200	n/d	75=55
NH_3	n/d	n/d	n/d	n/d	5=-0.5	n/d	n/d	n/d	n/d	n/d	n/d	n/d	n/d
AsH_3	n/d	1=0.56	n/d	n/d	2=0	n/d	n/d	n/d	n/d	n/d	n/d	n/d	n/d
Br_2	n/d	n/d	n/d	n/d	5=-0.1	n/d	n/d	n/d	n/d	n/d	n/d	n/d	n/d
C_4H_6	n/d	n/d	n/d	n/d	n/d	n/d	170=45	n/d	n/d	170=200	170=200	n/d	170=55
CS_2	n/d	n/d	n/d	n/d	n/d	n/d	140=45	n/d	n/d	140=200	140=200	n/d	140=55
CO	n/d	n/d	n/d	n/d	5=0	n/d	n/d	n/d	n/d	n/d	n/d	n/d	n/d
Cl_2	n/d	n/d	n/d	n/d	5=-0.05	n/d	n/d	n/d	n/d	n/d	n/d	n/d	n/d
ClO_2 (>10ppm)	n/d	n/d	n/d	n/d	5=-0.016	n/d	n/d	n/d	n/d	n/d	n/d	n/d	n/d
ClO_2 (=10ppm)	n/d	n/d	n/d	n/d	n/d	n/d	n/d	n/d	n/d	n/d	n/d	n/d	n/d
B_2H_6	n/d	1=0.72	n/d	n/d	2=0	n/d	n/d	n/d	n/d	n/d	n/d	n/d	n/d
C_3H_5OCl	n/d	n/d	n/d	n/d	n/d	n/d	50=45	n/d	n/d	50=200	50=200	n/d	50=55
C_2H_5OH	n/d	n/d	n/d	n/d	n/d	n/d	180=45	n/d	n/d	180=200	180=200	n/d	180=55
C_2H_5SH	n/d	n/d	n/d	n/d	5=<3	n/d	n/d	n/d	n/d	n/d	n/d	n/a	n/d
C_2H_4	n/d	n/d	n/d	n/d	n/d	n/d	220=45	n/d	n/d	220=200	220=200	n/d	220=55
C_2H_4O	n/d	n/d	n/d	n/d	n/d	n/d	275=45	n/d	n/d	275=200	275=200	n/d	275=55
F_2	n/d	n/d	n/d	n/d	2=0	n/d	n/d	n/d	n/d	n/d	n/d	n/d	n/d
CH_2O	n/d	n/d	n/d	n/d	n/d	n/d	330=45	n/d	n/d	330=200	330=200	n/d	330=55
GeH_4	n/d	1=1	n/d	n/d	2=0	n/d	n/d	n/d	n/d	n/d	n/d	n/d	n/d
N_2H_4	n/d	n/d	n/d	n/d	2=0	n/d	n/d	n/d	n/d	n/d	n/d	n/d	n/d
H_2 (ppm)	n/d	n/d	n/d	n/d	5=0	n/d	n/d	n/d	n/d	n/d	n/d	n/d	n/d
H_2 (LEL)	n/d	n/d	n/d	n/d	2=0	n/d	n/d	n/d	n/d	n/d	n/d	n/d	n/d

HBr	n/d	n/d	n/d	n/d	5=2.5	n/d	n/d	n/d	n/d	n/d	n/d	n/d	n/d
HCl	n/d	n/d	n/d	n/d	5=2.5	n/d	n/d	n/d	n/d	n/d	n/d	n/d	n/d
HCN	n/d	n/d	n/d	n/d	2=0	n/d	n/d	n/d	n/d	n/d	n/d	n/d	n/d
HF	yes n/d	n/d	n/d	3=4(theory)	yes n/d	n/d	n/d	n/d	yes n/d	n/d	n/d	n/d	n/d
H_2S	n/d	n/d	n/d	n/d	5=<1	n/d	n/d	n/d	n/d	n/d	n/d	3=1	n/d
H_2S (Hi Temp)	n/d	n/d	n/d	n/d	5=<1	n/d	n/d	n/d	n/d	n/d	n/d	n/d	n/d
CH_3OH	n/d	n/d	n/d	n/d	n/d	n/d	415=45	n/d	n/d	415=200	415=200	n/d	413=55
CH_3SH	n/d	n/d	n/d	n/d	5=<2	n/d	n/d	n/d	n/d	n/d	n/d	2=1	n/d
NO	n/d	n/d	n/d	n/d	5=0	n/d	n/d	n/d	n/d	n/d	n/d	n/d	n/d
NO_2	n/d	n/d	n/d	n/d	5=-0.025	n/d	n/d	n/d	n/d	n/d	n/d	n/d	n/d
O_3	n/d	1=0.015	n/d	n/d	2=0	n/d	n/d	n/d	n/d	n/d	n/d	n/d	n/d
$COCl_2$	n/d	n/d	n/d	n/d	2=0	n/d	n/d	n/d	n/d	n/d	n/d	n/d	n/d
PH_3	n/d	1=0.56	n/d	n/d	2=0	n/d	n/d	n/d	n/d	n/d	n/d	n/d	n/d
SiH_4	n/d	n/a	n/d	n/d	2=0	n/d	n/d	n/d	n/d	n/d	n/d	n/d	n/d
SO_2	n/d	n/d	n/d	n/d	n/a	n/d	n/d	n/d	n/d	n/d	n/d	n/d	n/d
$C_4H_6O_2$	n/d	n/d	n/d	n/d	n/d	n/d	200=45	n/d	n/d	n/a	200=200	n/d	200=55
C_2H_3Cl	n/d	n/d	n/d	n/d	n/d	n/d	200=45	n/d	n/d	200=200	n/a	n/d	200=55

n/a – not applicable

n/d – no data

6.9.3 Proper Application and Maintenance of Acrylonitrile Sensor

Acrylonitrile (ACN) is a very dangerous toxic gas that has OSHA and NIOSH TWA limits of 1 and 2 ppm respectively. It has an IDLH (Immediately Dangerous to Life and Health) limit of 85 ppm and a 15 minute ceiling limit exposure of 10 ppm.

The Detcon Model DM-700 Acrylonitrile Sensor is based on an electrochemical sensor which has certain limitations of use. Although it has good original span sensitivity to measure acrylonitrile, it has been known in certain application cases to lose sensitivity over time.

Continuous exposure to background ACN levels or repeated high ACN exposures will cause the sensor's response to ACN gas to be lost, and hence its useful life be shortened.

It is not reliably suitable for strict industrial hygiene monitoring where the application goal may be to assure that the ACN levels remain below the 2 ppm TWA limits.

When properly maintained it does offer the ability to function as gross leak detection method for ACN releases.

The lowest recommended scale range for ACN is 0- 50 ppm. The lowest recommended alarm set limit is 4 ppm.

Sensor Warranty is 6 months (this shortened warranty period reflects the vulnerability to unpredictable losses of sensitivity).

Using appropriate PPE, the sensor should periodically be span calibrated with ACN target gas (or occasionally bump tested with ACN target gas). However, frequent exposures to ACN during calibrations and bump testing will also shorten the life of the sensor. To address this, it is possible to use Carbon Monoxide (CO) as a cross-calibration gas, but CO may only be used if it is in combination with a program of periodic ACN bump testing that confirms the ultimate ability to adequately sense the ACN should a release occur. If the ACN bump test result is not acceptable, then a formal ACN span calibration must take place.

The end-user should work with Detcon to assure that a suitable amount of replacement Plug-in sensors are available on hand to handle the ongoing exchange of sensors that may require periodic replacement.

6.9.4 Spare Parts, Sensor Accessories, Calibration Equipment

Part Number	SPARE PARTS
927-245500-000	**DM-700 INTELLIGENT TRANSMITTER MODULE (ITM FOR TOXIC GAS SENSORS)**
927-345500-025	DM-700 Intelligent Transmitter Module (ITM for O_2 Sensors)
600-003803-000	Model DM-700 Splash Guard Adapter
377-xxxxxx-yyy	Replacement Plug-in toxic gas sensor (Refer to Table 12)
500-003087-100	Transient Protection PCA
Sensor Accessories	
897-850000-000	**NEMA 7 ALUMINUM ENCLOSURE WITH SOLID COVER – 3 PORT**
897-850000-316	NEMA 7 316SS Enclosure with solid cover – 3 port
613-120000-700	Sensor Splashguard with integral Cal Port
613-2R0000-000	Remote Calibration Adapter
943-002273-000	Harsh Environment Sensor guard
327-000000-000	Programming Magnet
960-202200-000	Condensation prevention packet (for J-Box replace annually)

Calibration Accessories	
943-000000-000	Calibration Wind Guard
943-000006-132	Threaded Calibration Adapter
943-050000-132	Span Gas Kit: Includes calibration adapter, span gas humidifier, 500cc/min fixed flow regulator, and carrying case. (Not including gas).
943-050000-HRG	Highly Reactive Gas Span Gas Kit (Used for NH_3, Cl_2, HCl, HBr, etc.)
See Detcon	Span Gases
943-05AM00-000	500 cc/min Fixed Flow Regulator for span gas bottle
RECOMMEND SPARE PARTS FOR 2 YEARS	
927-245500-000	**DM-700 INTELLIGENT TRANSMITTER MODULE (ITM FOR TOXIC GAS SENSORS)**
927-345500-025	DM-700 Intelligent Transmitter Module (ITM for O_2 Sensors)
600-003215-000	Splash Guard Adapter
377-xxxxxx-yyy	Replacement Plug-in toxic gas sensor (Refer to Table 12)
500-003087-100	Transient Protection PCA
960-202200-000	Condensation prevention packet (for J-Box. Replace annually)

7. Detcon Model TP-700

TP-700 Hydrogen Sulfide Sensor

This manual covers the following ranges:
0-20ppm, 0-50ppm, 0-100ppm and 0-200ppm

TELEDYNE DETCON

TELEDYNE DETCON, Inc.
4055 Technology Forest Blvd.,
The Woodlands, Texas 77381
Phone 713.559.9200

WWW.TELEDYNEGASANDFLAMEDETECTION.COM

7.1 Introduction

7.1.1 Description

Detcon Model TP-700 hydrogen sulfide sensors are non-intrusive "Smart" sensors designed to detect and monitor H_2S in air. Ranges of detection are 0-20ppm, 0-50ppm, 0-100ppm, and 0-200ppm. The sensor features an LED display of current reading, fault and calibration status. The Sensor is equipped with standard analog 4-20mA and Modbus™ RS-485 outputs. A primary feature of the sensor is its method of automatic calibration, which guides the user through each step via fully scripted instructions displayed on the LED display.

The microprocessor-supervised electronics are packaged in an encapsulated module and housed in an explosion proof casting, called the ITM (Intelligent Transmitter Module). The ITM includes a four character alpha/numeric LED used to display sensor readings, and the sensor's menu driven features when the hand-held programming magnet is used.

Solid State H_2S Sensor Technology

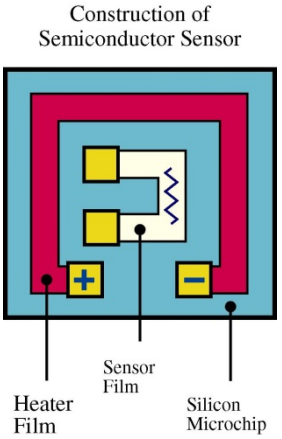

The sensor technology is a patented solid-state mixed metal oxide semiconductor. The sensor consists of two thin films, a temperature sensitive heater film, and a hydrogen sulfide sensitive sensor film. Both films are deposited on a silicon microchip by vacuum deposition. The heater film elevates the operating temperature of the sensor film to a level where a good sensitivity and response to hydrogen sulfide is achieved. The sensor film is a proprietary mixed metal oxide that shows an extremely stable and dynamic response to hydrogen sulfide gas.

Range of sensitivity is from parts per billion to percent by volume. The rugged sensor is capable of maintaining its operating characteristics for periods of up to 7-10 years in most industrial environments and as such, is supported by a 10-year conditional warranty.

Principle of Operation

Method of detection is by diffusion/adsorption. Air and H_2S diffuse through a sintered stainless steel filter (flame arrestor) and contact the heated surface of the metal oxide sensor film. As hydrogen sulfide gas molecules react with oxygen ions on the film, there is a decrease in electrical resistance proportional to the gas concentration. The heater film elevates the temperature of the sensor film creating convection and promoting a quick response to changing gas concentrations. Electronically, the heater film is used to maintain a constant temperature of the sensor film enhancing stability and repeatability. The sensor response is reversible and results in continuous monitoring of ambient air conditions.

7.1.2 Sensor Electronics Design

Intelligent Sensor Module

The Intelligent Transmitter Module (ITM) is a fully encapsulated microprocessor-based package that accepts a plug-in field replaceable H_2S sensor. Circuit functions include extensive I/O circuit protection, sensor pre-amplifier, sensor temperature control, on-board power supplies, microprocessor, LED display, magnetic programming switches, a linear 4-20mA DC output, and a Modbus™ RS-485 output. Magnetic program switches located on either side of the LED Display are activated via a hand-held magnetic programming tool, thus allowing non-intrusive operator interface with the ITM. Calibration can be accomplished without declassifying the area. Electrical classifications are Class I, Division 1, Groups B, C, D, Class I, Zone 1, Group IIB+H_2 and II 2G Ex db IIB+H_2 Gb.

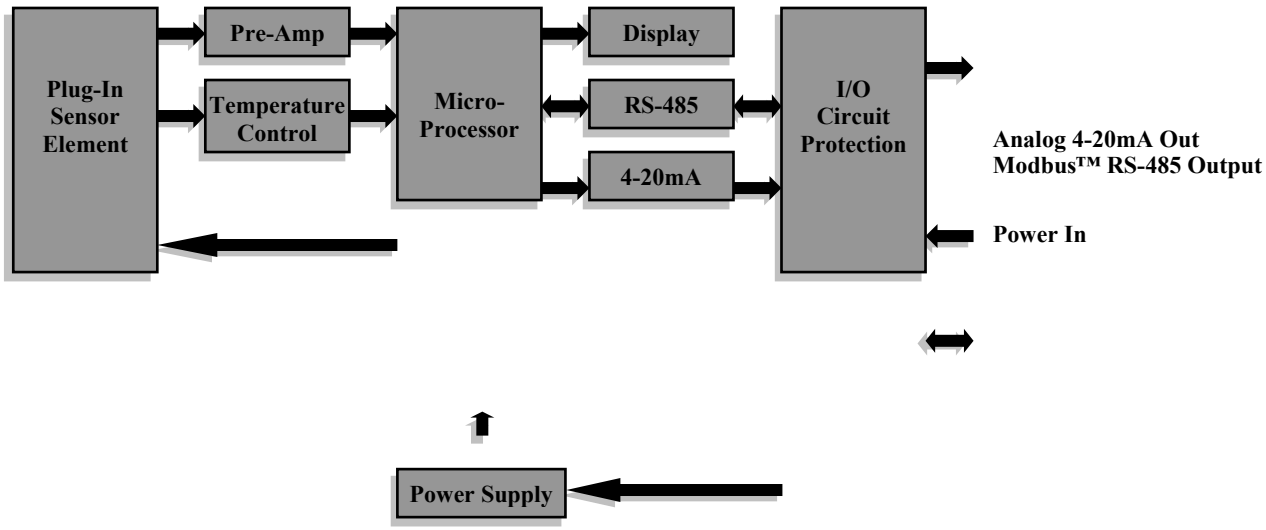

Figure 45 ITM Circuit Functional Block Diagram

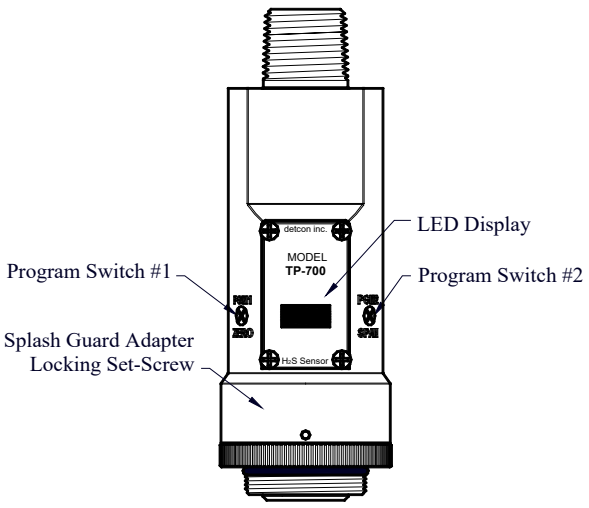

Figure 46 Sensor Assembly Front View

7.1.3 Modular Mechanical Design

The Model TP-700 Sensor Assembly is completely modular and is made up of four parts (See Figure 47):

13) TP-700 Intelligent Sensor Module (ITM)
14) Field Replaceable Plug-in H_2S Gas Sensor
15) Model 700 Housing Bottom Assembly (contains the Housing Bottom, Flame Arrestor, Retaining Ring, and rubber O-Ring's)
16) Splash Guard.

NOTE: All metal components are constructed from electro polished 316 Stainless Steel in order to maximize corrosion resistance in harsh environments.

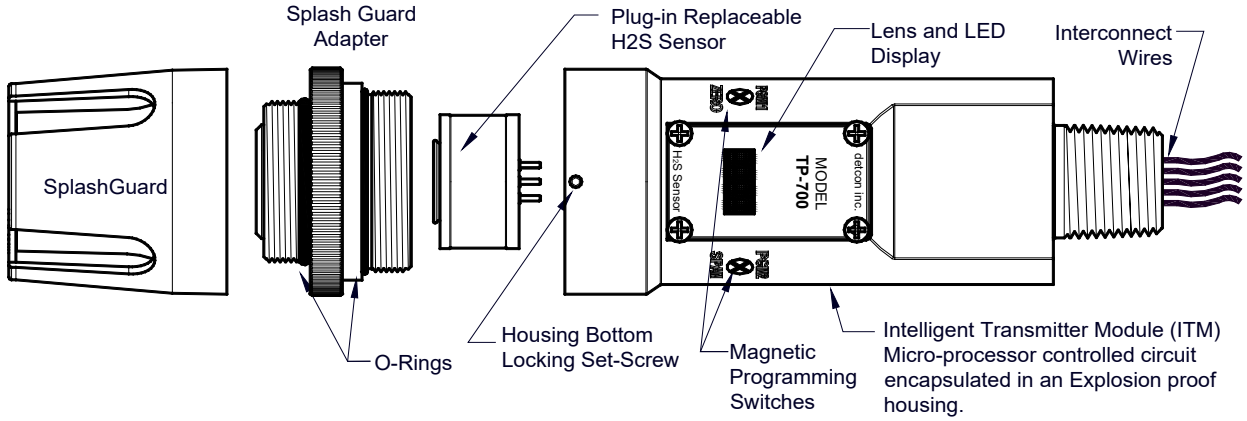

Figure 47 Sensor Assembly Breakaway

7.1.4 Plug-in Replaceable Sensor

The Detcon solid-state H_2S gas sensor is a field proven, plug-in replaceable type sensor with over-sized gold-plated connections that eliminate corrosion problems. It can be accessed and replaced in the field very easily by releasing the locking screw and unthreading the housing bottom. The Detcon solid state H_2S sensor has an infinite shelf life and is supported by a 10 year, industry-leading warranty.

Figure 48 TP Plug-in Sensor Cell

7.2 Installation

7.2.1 ATEX Operational Guidelines for Safe Use

1. Ensure that the Housing Bottom and plug-in sensor are installed during operation. The Housing Bottom should be threaded tightly to the Intelligent Transmitter Module. The locking setscrew (M3.5 x 0.6 6g6h Stainless Steel Allen set screw cup point with yield strength of greater than 40,000 PSI, typical 80,000 PSI) should then be tightened down to keep the Housing Bottom from being inadvertently removed or from becoming loose under vibration. The locking setscrew ensures that Housing Bottom is only removable by authorized personnel with the use of special tools. A M1.5 Allen Wrench is required. If screw requires replacement, only an identical screw may be used.

2. Removal of the Housing Bottom violates the Ex db protection method and hence power must be removed from the sensor prior to its safe removal.

3. The screws holding down the retaining plate label are special fasteners of type Stainless Steel, Phillips Pan-head Machine screw, M3 x 0.5 6g6h having yield strength of greater than 40,000 PSI, typical 80,000 PSI. If screw requires replacement, only an identical screw may be used.

4. Proper precautions should be taken during installation and maintenance to avoid the build-up of static charge on the plastic components of the sensor. This includes the splashguard.

5. Do not operate the sensor outside of the stated operating temperature limits.

6. Do not operate the sensor outside the stated operating limits for voltage supply.

7.2.2 Sensor Placement

Selection of sensor location is critical to the overall safe performance of the product. Five factors play an important role in selection of sensor locations:

(1) Density of the gas to be detected
(2) Most probable leak sources within the industrial process
(3) Ventilation or prevailing wind conditions
(4) Personnel exposure
(5) Maintenance access
(6) Additional Placement Considerations

Density

Placement of sensors relative to the density of the target gas is such that sensors for the detection of heavier than air gases should be located within 4 feet of grade as these heavy gases will tend to settle in low lying areas. For gases lighter than air, sensor placement should be 4-8 feet above grade in open areas or in pitched areas of enclosed spaces.

Note: H_2S is heavier than air.

Leak Sources

The most probable leak sources within an industrial process include flanges, valves, and tubing connections of the sealed type where seals may either fail or wear. Other leak sources are best determined by facility engineers with experience in similar processes.

Ventilation

Normal ventilation or prevailing wind conditions can dictate efficient location of gas sensors in a manner where the migration of gas clouds is quickly detected.

Personnel Exposure

The undetected migration of gas clouds should not be allowed to approach concentrated personnel areas such as control rooms, maintenance or warehouse buildings. A more general and applicable thought toward selecting sensor location is combining leak source and perimeter protection in the best possible configuration.

Maintenance Access

Consideration should be given to providing easy access for maintenance personnel. Consideration should also be given to the consequences of close proximity to contaminants that may foul the sensor prematurely.

NOTE: In all installations the gas sensor should point straight down (refer to Figure 50). Improper sensor orientation may result in false readings and permanent sensor damage.

Additional Placement Considerations

The sensor should not be positioned where it may be sprayed or coated with surface contaminating substances. Painting sensor assemblies is prohibited.

Although the sensor is designed to be RFI resistant, it should not be mounted in close proximity to high-powered radio transmitters or similar RFI generating equipment.

When possible mount in an area void of high wind, accumulating dust, rain or splashing from hose spray, direct steam releases, and continuous vibration. If the sensor cannot be mounted away from these conditions then make sure the Detcon Harsh Environment Splashguard accessory is used.

Do not mount in locations where temperatures will exceed the operating temperature limits of the sensor. Where direct sunlight leads to exceeding the high temperature-operating limit, use a sunshade to help reduce temperature.

7.2.3 Sensor Contaminants and Interference

Solid State H_2S sensors may be adversely affected by exposure to certain airborne substances. Loss of sensitivity or corrosion may be gradual if such materials are present in sufficient concentrations.

The more common materials that potentially cause problems with the sensors are as follows:

- Silicone vapors such as those found in greases and lubricants
- Halide Compounds containing Chlorine, Chlorine Dioxide, Fluorine, HF, HCl, and Bromine
- Caustic and Acid liquids and concentrated vapors
- Heavy metals such as tetraethyl lead

The presence of such contaminants in an area does not preclude the use of this H_2S sensor technology, although it is likely that the sensor lifetime will be shorter as a result. Use of this sensor in these environments may require more frequent calibration checks to ensure safe system performance.

Solid State H_2S sensors require O_2 in the background gas and the reading is affected by changing O_2 levels.

Interference Data
There are some gases typically found in industrial environments that can cause a cross-interference response on the sensor. See the Table below for some examples.

Table 15 Cross Interference Gases

GAS	PPM	GAS	PPM
Methane	25,000 = 0	Ammonia	500 = 1
Ethane	5,000 = 0	Diesel Fuel	1000 = 0
Hexane	5,000 = 0	Dimethyl Sulfide	4.4 = 0
Propane	5,000 = 0	Ethylene	200 = 0
Butane	5,000 = 0	Freon 12	1,000 = 0
Carbon Monoxide	800 = 0	Hydrogen	1,000 = 8
Carbon Dioxide	5,000 = 0	Methyl Mercaptan	10 = 5
Carbon Disulfide	14 = 0	Sulfur Dioxide	300 = 0
Methanol	500 = 5	Toluene	32 = 0
Isopropanol	500 = 3	Ethanol	500 = 5

NOTE: The Detcon MOS Sensor Cell can be damaged to the point of non-functioning if the unit is left off power and in the presence normal air levels of moisture for periods exceeding 8 hours.

NOTE: Always protect the sensor cell with the Detcon Sealing Cap and a fresh desiccant packet when the sensor is powered off this will avoid permanent sensor cell damage and help preserve the span calibration.

7.2.4 Mounting Installation

The TP-700 sensor assembly is designed to be threaded into a ¾" Female NPT fitting of a standard cast metal, Explosion-Proof Enclosure or Junction Box. There are two wrench flats on the upper section of the sensor that should be used to thread the sensor into the ¾" NPT receiving connection. Thread the sensor up until tight (5+ turns is required) and until the display is pointed in the direction that sensor will normally be viewed and accessed.

The TP-700 should be vertically oriented so that the sensor points straight downward. The explosion-proof enclosure or junction box would then typically be mounted on a wall or pole. Detcon provides a standard selection of junction boxes available as sensor accessories (See Figure 39 below), but any appropriately rated enclosure with a downward facing ¾" Female NPT connection will suffice.

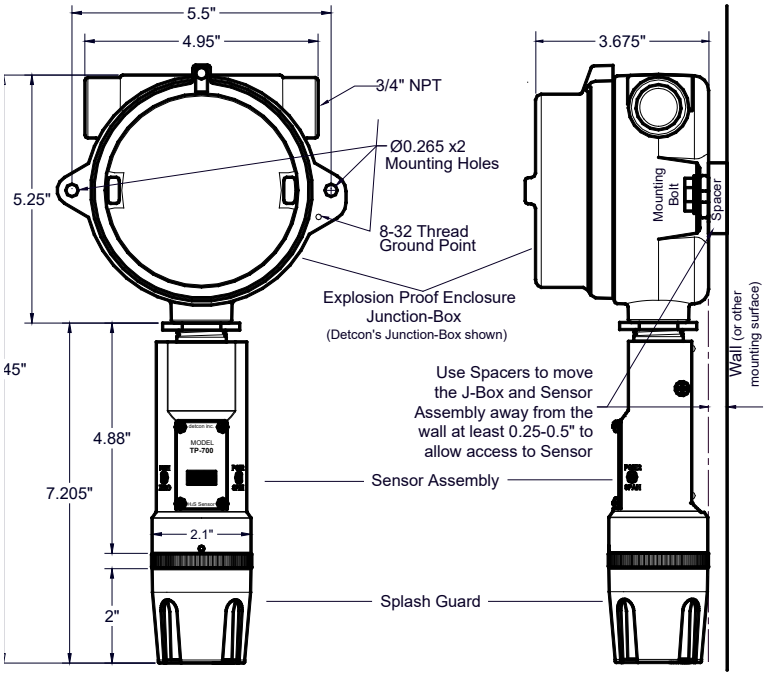

Figure 49 Outline and Mounting Dimensions

When mounting on a wall, it is recommended to use a 0.25"-0.5" spacer underneath the mounting ears of the Detcon standard J-Box to offset the sensor assembly from the wall and create open access around the sensor assembly. Spacing requirements for other junction boxes may vary.

When mounting on a pole, secure the Junction Box to a suitable mounting plate and attach the mounting plate to the pole using U-Bolts. (Pole-Mounting brackets for Detcon J-box accessories are available separately.)

7.2.5 Electrical Installation

The Sensor Assembly should be installed in accordance with local electrical codes. The sensor assemblies are CSA approved (US and Canada) for Class I, Division 1, Groups B, C, & D area classifications, and are ATEX Approved for Class I, Zone 1, Group IIB+H_2 area classifications.

Proper electrical installation of the gas sensor is critical for conformance to Electrical Codes and to avoid damage due to water leakage. Refer to Figure 50 and Figure 51 for proper electrical installation.

NOTE: If a conduit run exits the secondary port, repeat the installation technique shown in Figure 50.

In Figure 50, the drain allows H_2O condensation inside the conduit run to safely drain away from the sensor assembly. The electrical seal fitting is required to meet the National Electrical Code per NEC Article 500-3d (or Canadian Electrical Code Handbook Part 1 Section 18-154). Requirements for locations of electrical seals are covered under NEC Article 501-5. Electrical seals also act as a secondary seal to prevent water from entering the wiring terminal enclosure. However, they are not designed to provide an absolute watertight seal, especially when used in the vertical orientation.

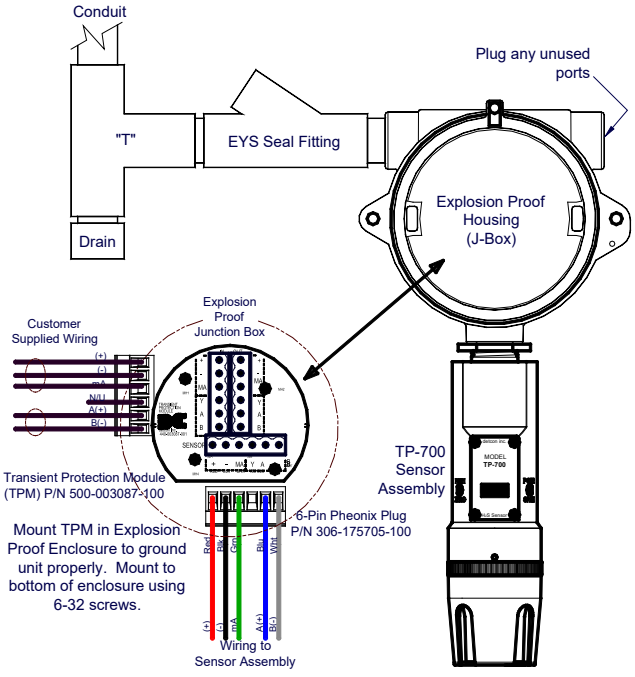

Figure 50 Typical Installation

NOTE: A conduit seal is typically required to be located within 18" of the Stainless Steel J-Box and Sensor Assembly and at the entry of the Aluminum J-Box and Sensor Assembly for North American Installations. Crouse Hinds type EYS2, EYD2 or equivalent are suitable for this purpose.

NOTE: The Detcon Warranty does not cover water damage resulting from water leaking into the enclosure. However, since the electronics are 100% epoxy encapsulated, only the wire terminations could get wet. Moisture could cause abnormal operation and possibly corrosion to the terminal connections, but permanent damage to the sensor would not be expected.

NOTE: Any unused ports shall be blocked with suitable ¾" male NPT plugs. Detcon supplies one ¾" NPT male plug with their accessory J-box enclosures (Detcon P/N 8522-750). If connections are other than ¾" NPT, use an appropriate male plug of like construction material.

NOTE: All devices connecting to the ¾" NPT conduit entries should be tightened to a minimum of 16 foot-pounds torque.

NOTE: The flamepath joints are not intended to be repaired if damaged.

NOTE: For ATEX use, cable glands, adapters, and/or blanking elements shall be ATEX certified to Ex d IIC and shall be installed.

WARNING: Cables and cable glands must be rated for ≥90°C.

NOTE: Connect earth wire to crimped terminal (≥4mm^2) (Internal and external ground points).

7.2.6 Field Wiring

Detcon Model TP-700 solid-state H_2S sensor assemblies require three conductor connections between power supplies and host electronic controller's 4-20mA output, and 2 conductor connections for the Modbus™ RS-485 serial interface. Wiring designations are + (DC), – (DC), mA (sensor signal), and Modbus™ RS-485 A (+), and B (-). Maximum wire length between sensor and 24VDC source is shown in the Table below. Maximum wire size for termination in the Detcon J-Box accessory is 14 gauge.

Table 16 Wire Gauge vs. Distance

AWG	WIRE DIA.	METERS	FEET	Over-Current Protection
22	0.723mm	700	2080	3A
20	0.812mm	1120	3350	5A
18	**1.024MM**	1750	5250	7A
16	1.291mm	2800	8400	10A
14	1.628mm	4480	13,440	20A

NOTE 1: Wiring table is based on stranded tinned copper wire and is designed to serve as a reference only.

NOTE 2: Shielded cable is required for installations where cable trays or conduit runs include high voltage lines or other possible sources of induced interference. Separate conduit runs are highly recommended in these cases.

NOTE 3: The supply of power should be from an isolated source with over-current protection as stipulated in table.

Terminal Connections

CAUTION: Do not apply System power to the sensor until all wiring is properly terminated. Refer to Section7.2.7.

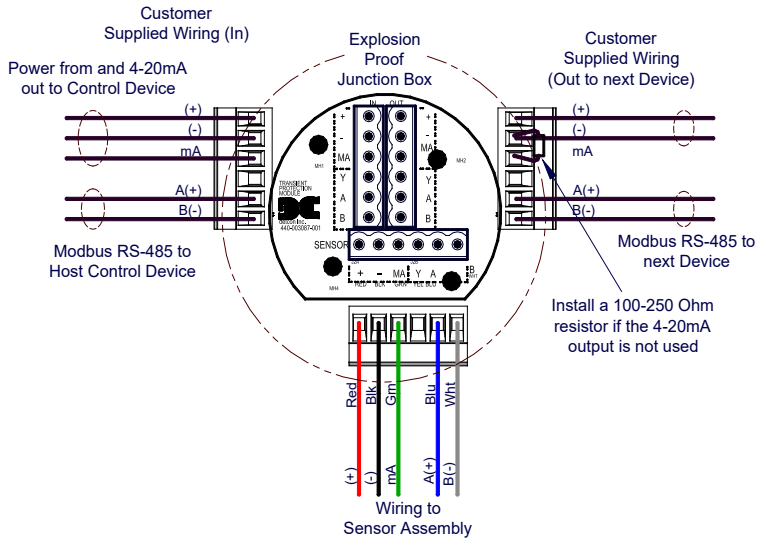

Figure 51 Sensor Wire Connections

f) Remove the junction box cover. Identify the terminal blocks for customer wire connections.

g) Observing correct polarity, terminate the 3-conductor 4-20mA field wiring (+, -, and mA) to the sensor assembly wiring in accordance with the detail shown in Figure 51. If the 4-20mA output is not used, the green wire from the sensor must be connected to the (-) terminal on the Transient Protection Module.

NOTE: If the 4-20mA output is not being used, the Green wire from the sensor *must* be connected to the Black wire at the (-) terminal on the Transient Protection Module to ensure RS-485 communication is not disrupted by a 4-20mA Fault.

h) If applicable, terminate the RS-485 serial wiring as shown in Figure 51. Use the second plug (Out) as termination point on the customer side to facilitate a continuous RS-485 serial loop.

The RS-485 (if applicable) requires 24 gauge, two conductor, shielded, twisted pair cable between sensor and host PC. General Cable Commodore part number ZO16P0022189 is recommended.

NOTE: Install a 120Ω resistor across A & B terminals on the last sensor in the serial loop.

i) Trim all exposed wire leads if they are not permanently landed in the terminal block.

j) Replace the junction box cover.

NOTE: A 6-32 threaded exterior ground point is provided on the sensor housing for an external ground. If the Sensor Housing is not mechanically grounded, an external ground strap ***must*** be used to ensure that the sensor is electrically grounded.

7.2.7 Initial Start Up

Upon completion of all mechanical mounting and termination of all field wiring, apply system power in the range of 11.5-30VDC (24VDC typical) and observe the following normal conditions:

a) TP-700 display reads "0", and no fault messages are flashing.

b) A temporary upscale reading may occur as the sensor heats up. This upscale reading will decrease to "0" ppm within 1-2 minutes of power-up, assuming there is no gas in the area of the sensor.

NOTE: A desiccant cap with a desiccant packet is attached to the sensor cell housing to avoid damage during storage and shipping. This prevents water from contacting the sensor film, and as a result helps to retain the stability of the factory span calibration.

c) Remove the desiccant cap about 10 minutes after applying power to the sensor and install the weatherproof splashguard accessory supplied with the sensor.

IMPORTANT NOTE: *Do not remove the desiccant cap and cover until power is applied to the sensor. Store the desiccant caps with the desiccant packets in a sealed container (i.e. zip-lock Bag) for future use. It is mandatory to reinstall the desiccant cap and packet during any periods without power lasting more than 1 hour. An active desiccant packet is blue in color and turns pink when consumed. (re-order P/N 960-240010-000). Do not use the desiccant packet if it is pink in color, order new packets as required.*

NOTE: The 4-20mA signal is held constant at 4mA for the first two minutes after power up.

7.2.7.1 Initial Operational Tests

After a warm up period of 1 hour, the sensor should be checked to verify sensitivity to H_2S gas.

Material Requirements

- Detcon PN 613-120000-700 700 Series Splash Guard with integral Cal Port -OR-
- Detcon PN 943-000006-132 Threaded Calibration Adapter
- Detcon PN 942-010112-025 Span Gas; 25ppm H_2S in balance Air at fixed flow rate between 200 - 500cc/min (10ppm for 0-20ppm range)
- Detcon PN 985-241100-321 In-Line Humidifying Tube

NOTE: Do not use H_2S in Nitrogen background gas mixtures. This will cause significant reading inaccuracies.

a) Connect the In-Line Humidifying Tube between the cal gas cylinder and the sensor. The humidifying tube will introduce the ambient relative humidity into the Cal Gas as it passes through the tube.

b) Attach the calibration adapter to the threaded sensor housing. Apply the test gas at a controlled flow rate of 200 - 500cc/min (200cc/min is the recommended flow). Allow 1-2 minutes for the reading to stabilize. Observe that during the 1-2 minutes the ITM display increases to a level near that of the applied calibration gas value.

c) Remove test gas and observe that the ITM display decreases to “0”.

Initial operational tests are complete. Detcon H_2S gas sensors are factory calibrated prior to shipment, and should not require significant adjustment on start up. However, it is recommended that a complete calibration test and adjustment be performed 16 to 24 hours after power-up. Refer to span calibration instructions in Section 7.3.4.

7.3 Operation

7.3.1 Programming Magnet Operating Instructions

The Operator Interface of the Model 700 Series gas sensors is accomplished via two internal magnetic switches located to either side of the LED display (see Figure 53). The two switches, labeled “PGM1” and “PGM2”, allow for complete calibration and configuration, thereby eliminating the need for area de-classification or the use of hot permits.

Figure 52 Magnetic Programming Tool

The magnetic programming tool (Figure 52) is used to operate the magnetic switches. Switch action is defined as momentary contact, 3-second hold, and 10-second hold. (Hold times are defined as the time from the point when the arrow prompt “🡄 “ appears.) For momentary contact use, the programming magnet is briefly held over a switch location. For 3-second hold, the programming magnet is held in place over the switch location for three seconds. For 10-second hold, the programming magnet is held in place over the switch location for 10 seconds. The 3 and 10 second holds are generally used to enter calibration/program menus and save new data. The momentary contact is generally used to move between menu items and to modify set-point values. Arrows (“🡄” and “🡆”) are used on the LED display to indicate when the magnetic switches are activated. The location of “PGM1” and “PGM2” are shown in Figure 53.

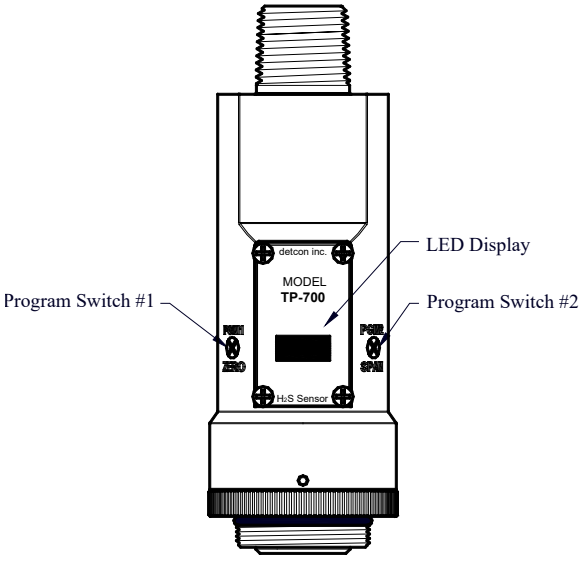

Figure 53 Magnetic Programming Switches

NOTE: While in the Program Mode, if there is no magnetic switch interaction after 4 consecutive menu scrolls, the sensor will automatically revert to normal operating condition. While changing values inside menu items, **if there is no magnet activity after 3-4 seconds the sensor will revert to the menu scroll.** *(Exception to this is with “Signal Output Check” mode.)*

7.3.2 Operator Interface

The operating interface is menu-driven via the two magnetic program switches located under the target marks of the sensor housing. The two switches are referred to as “PGM1” and “PGM2”. The menu list consists of three major items that include sub-menus as indicated below. (Refer to the complete Software Flow Chart.)

Normal Operation

Current Reading and Fault Status

Calibration Mode

AutoSpan

Program Mode

View Sensor Status
- Sensor Model Type
- Current Software Version
- Range of Detection
- Serial ID address
- AutoSpan Level
- Days Since Last AutoSpan
- Remaining Sensor Life
- Sensor Heater Power
- Sensor Heater Voltage
- Raw Sensor Resistance
- mA Output
- Input Voltage Supply
- Sensor Temperature

Set AutoSpan Level
Set Range
Set Serial ID
Set Heater Power
Signal Output Check
Restore Default Settings

Software Flowchart

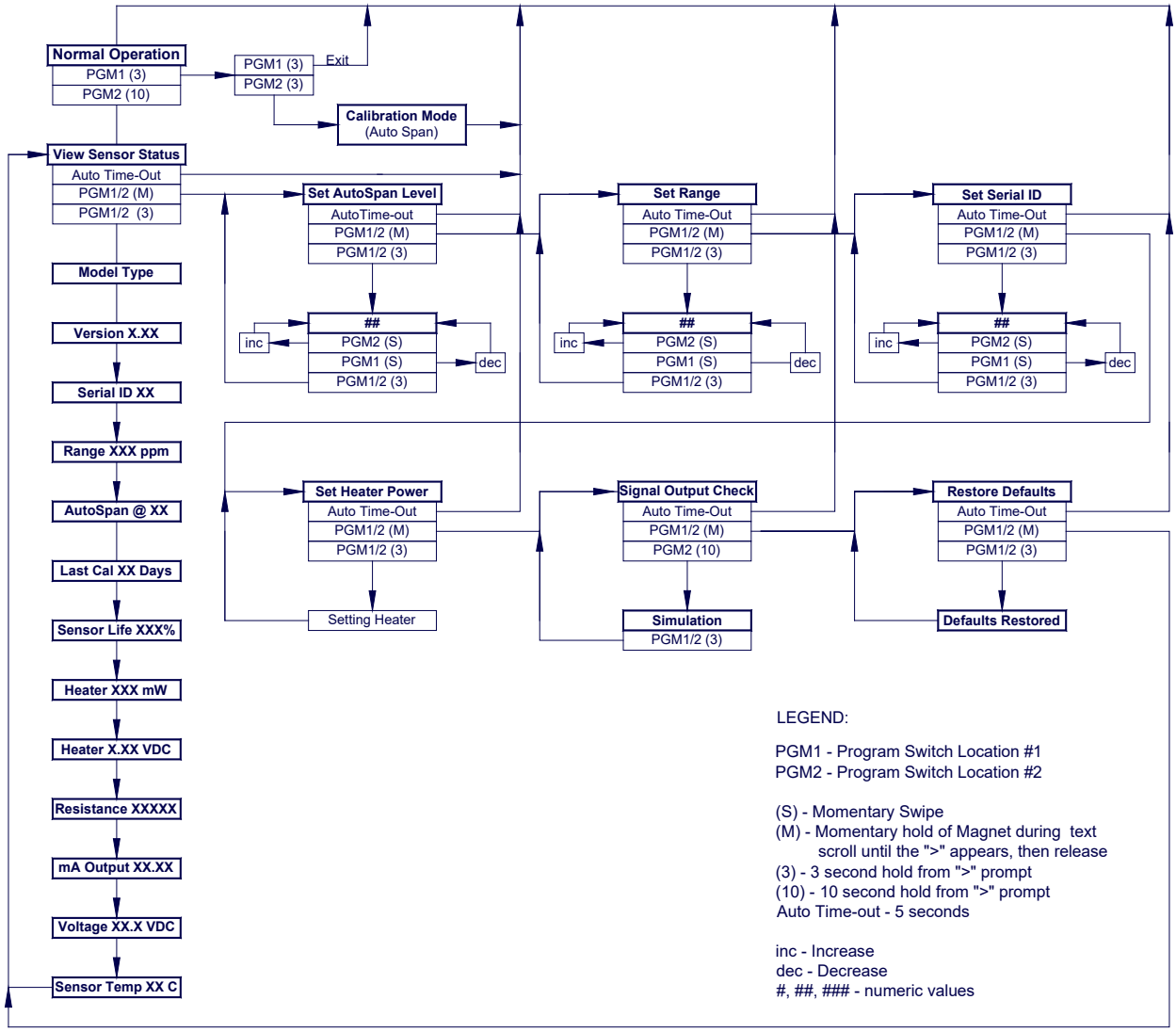

Figure 54 TP-700 Software Flowchart

7.3.3 Normal Operation

In normal operation, the ITM Display continuously shows the current sensor reading, which will normally appear as " 0 ". Once every minute, the LED display will flash the sensor's units of measure and the gas type (i.e. ppm H_2S). If the sensor is actively experiencing any diagnostic faults, a "Fault Detected" message will scroll across the display on the ITM display once every minute instead of the units of measure and the gas type. At any time, while the sensor is in "Fault Detected" mode, PGM1 or PGM2 can be swiped to prompt the sensor to display a list of the active faults.

In normal operation, the 4-20mA current output linearity corresponds with the full-scale range. The RS-485 Modbus™ serial output provides the current gas reading and complete fault status on a continuous basis when polled by the master device.

7.3.4 Calibration Mode (AutoSpan)

Calibration Mode allows for sensor span calibration. Span calibration should be performed on a routine basis (quarterly minimum) to ensure reliable performance. If a sensor has been exposed to any de-sensitizing gases or to very high over-range H_2S levels, then a re-calibration should be considered. Unless otherwise specified, span adjustment is recommended at 25ppm for the 0-100 and 0-50ppm ranges (and 10ppm for 0-20ppm range). This function is called "AUTO SPAN".

Material Requirements:

- Detcon PN 327-000000-000 MicroSafe™ Programming Magnet
- Detcon PN 613-120000-700 700 Series Splash Guard with integral Cal Port and Calibration Wind Guard (P/N 943-000000-000) -OR-
- Detcon PN 943-000006-132 Threaded Calibration Adapter
- Detcon PN 985-241100-321 In-Line Humidifying Tube
- Detcon PN 942-010112-025 H_2S Span Gas (recommended) or other suitable span gas source containing H_2S gas in air balance. A fixed flow rate of 200-500cc/min is recommended.

Alternate Span Calibration Methods:

The TP-700 Sensor may also be calibrated with the H_2S glass ampoule technique. Detcon supplies a cover for use with the industry standard ampoule breaking cup (available from General Monitors) that has thread adapter to connect to the TP-700. The adapter cover is Detcon P/N 943-000GMI-CAP.

Remove the Detcon Splashguard and connect the adapter cover firmly in place. Attach the ampoule breaking cup firmly to the cover with ampoule installed and follow the balance of the instructions for breaking ampoule and executing AutoSpan.

The TP-700 sensor may also be calibrated using a certified H_2S gas generator product set for the correct H_2S gas level and flow rate.

NOTE 1: Before performing AutoSpan Calibration, verify that the AutoSpan level matches the span calibration gas concentration as described in Section 7.3.5.3.

NOTE 2: The span gas source must have a normal background concentration of 20.9% O2 (H_2S balanced with Air). Pure Nitrogen background mixtures are not acceptable! Significant span calibration inaccuracies will result.

NOTE 3: An H_2S gas concentration of 25ppm is strongly recommended for 0-50 and 0-100ppm ranges (10ppm span gas for 0-20ppm range). This should be supplied at a controlled flow rate of 200 to 500cc/min, with 200cc/min being the recommended flow rate. Other concentrations can be used if as they fall within allowable levels.

NOTE 4: Span gas bottles contain 0% humidity and this ultra-low humidity condition will cause inaccurate readings when used to calibrate a sensor. To prevent this error, Detcon prescribes the use of a 24" flexible In-Line Humidifying Tube, which adds the relative humidity to the span gas. The humidifying tube is not necessary when using a gas generating calibration device that consists of pumped ambient air and an H_2S generating source.

NOTE 5: The Calibration Wind Guard must be used when the Splashguard Adapter with integral Cal Port is used. Failure to use the Calibration Wind Guard may result in an inaccurate AutoSpan calibration.

CAUTION: Verification that the calibration gas level setting matches the calibration span gas concentration is required before executing "AutoSpan" calibration. These two numbers must be equal.

AutoSpan consists of entering Calibration Mode and following the menu-displayed instructions. The display will ask for the application of span gas in a specific concentration. The applied gas concentration must be equal to the calibration gas level setting. The factory default setting and recommendation for span gas concentration is 10ppm for the 0-20ppm range and 25ppm for the 0-50ppm and 0-100ppm ranges. If a span gas containing the recommended concentration is not available, other concentrations may be used as long as they fall between 10% and 50% of selected full-scale range. However, any alternate span gas concentration value must be programmed via the "Set AutoSpan Level" menu before proceeding with AutoSpan calibration. Follow the instructions "a" through "e" below for AutoSpan calibration.

a) Verify that the AutoSpan Level is equal to the Calibration Span Gas Concentration. (Refer to View Sensor Status in Section 7.3.5.2.) If the AutoSpan Level is not equal to the Calibration span gas concentration, adjust the AutoSpan Level as instructed in Section 7.3.5.3.

b) From Normal Operation, enter Calibration Mode by holding the programming magnet over PGM1 for 3 seconds. Note, the "➔" prompt will show that the magnetic switch is activated during the 3 second hold period. The display will then scroll "PGM1=Exit PGM2=Span". Hold the programming magnet over PGM2 for 3 seconds to execute AutoSpan (or allow to timeout in 5 seconds if AutoSpan is not intended). The ITM will then scroll "Apply XX ppm Gas".

NOTE: Upon entering Calibration Mode, the 4-20mA signal drops to 2mA and is held at this level until the program returns to normal operation. Modbus™ Status Register bit 14 is also set to signify when the sensor is in-calibration mode.

c) Apply the span calibration test gas via the In-Line Humidifying Tube at a flow rate of 200-500cc/min (200cc/min is the recommended flow rate). Optionally, the gas ampoule or gas generator H_2S calibration source may be used. As the sensor signal begins to increase the display will switch to reporting "XX" reading methods as the ITM shows the sensor's "as found" response to the span gas presented. If it fails to meet the minimum in-range signal change criteria within 2½ minutes, the display will report "Range Fault" twice and the ITM will return to normal operation, aborting the AutoSpan sequence. The ITM will continue to report a "Range Fault" and will not clear the fault until a successful AutoSpan is completed.

Assuming acceptable sensor signal change, after 3 minutes the reading will auto-adjust to the programmed AutoSpan level. During the next 30 seconds, the AutoSpan sequence checks the sensor for acceptable reading stability. If the sensor fails the stability check, the reading is re-adjusted back to the AutoSpan level and the cycle repeats until the stability check is passed. Up to three additional 30-second stability check periods are allowed before the sensor reports a "Stability Fault" twice and the ITM will return to normal operation, aborting the AutoSpan sequence. The ITM will continue to report a "Stability Fault" and will not clear the fault until a successful AutoSpan is completed.

If the sensor passes the stability check, the ITM reports a series of messages:

"**AutoSpan Complete**"
"**Sensor Life XXX%**"
"**Remove Span Gas**"

d) Remove the span gas and calibration adapter, or the optional gas ampoule or gas generator calibration technique components when AutoSpan cycle is complete. The ITM will report a live reading as it clears toward "0". When the reading clears below 5ppm, the ITM will display "Span Complete" and will revert to normal operation. If the sensor fails to clear to less than 5ppm within 5 minutes, a "Clearing Fault" will be reported twice and the ITM will return to normal operation, aborting the AutoSpan sequence. The ITM will continue to report a "Clearing Fault" and will not clear the fault until a successful AutoSpan is completed.

e) AutoSpan calibration is complete.

NOTE 1: If the sensor fails the minimum signal change criteria, a **"Range Fault"** will be declared and a "Fault Detected" message will be displayed alternately with the sensor's current reading. The 4-20mA output will be taken to 0mA and the "Range Fault" fault bit will be set on the Modbus™ output.

NOTE 2: If the sensor fails the stability criteria, a **"Stability Fault"** will be declared and a "Fault Detected" message will be displayed alternately with the sensor's current reading. The 4-20mA output will be taken to 0mA and the "Stability Fault" fault bit will be set on the Modbus™ output.

NOTE 3: If the sensor fails the clearing time criteria, a "**Clearing Fault**" will be declared and a **"**Fault Detected" message will be displayed alternately with the sensor's current reading. The 4-20mA output will be taken to 0mA and the "Clearing Fault" fault bit will be set on the Modbus™ output.

NOTE 4: The most common cause of "**Range Fault**" and "**Stability Fault**" is the improper storage of the unit / sensor cell. When the sensor power is removed for any period of time, the sensor cell should be protected with a Desiccant Pack (P/N 960-240010-000) and covered by the Dust Cap (P/N 600-003232-000)

7.3.5 Program Mode

Program Mode provides a "View Sensor Status" menu to check operational and configuration parameters. Program Mode provides for adjustment of the AutoSpan Level, Sensor Range, Heater Power, and Serial ID. Additionally, Program Mode includes the diagnostic function "Signal Output Check" and "Restore Factory Defaults".

The Program Mode menu items appear in the order presented below:

View Sensor Status
Set AutoSpan Level
Set Range
Set Serial ID
Set Heater Power
Signal Output Check
Restore Default Settings

7.3.5.1 Navigating Program Mode

From Normal Operation, enter Program Mode by holding the magnet over PGM2 for 4 seconds (until the displays starts to scroll "View Sensor Status"). Note, the "➔" prompt will show that the magnetic switch is activated during the 4 second hold period. The ITM will enter Program Mode and the display will display the first menu item "View Sensor Status". To advance to the next menu item, hold the magnet over PGM1 or PGM2 while the current menu item's text is scrolling. At the conclusion of the text scroll the arrow prompt ("➔" for PGM2 or "➔" for PGM1) will appear, immediately remove the magnet. The ITM will advance to the next menu item. Repeat this process until the desired menu item is displayed. Note, PGM1 moves the menu items from right to left and PGM2 moves the menu items from left to right.

To enter a menu item, hold the magnet over PGM1 or PGM2 while the menu item is scrolling. At the conclusion of the text scroll the "➔"prompt ("➔" for PGM2 or "➔" for PGM1) will appear, continue to hold the magnet over PGM1 or PGM2 for an additional 3-4 seconds to enter the selected menu item. If there is no magnet activity while the menu item text is scrolling (typically 4 repeated text scrolls), the ITM will automatically revert to Normal Operation.

7.3.5.2 View Sensor Status

View Sensor Status displays all current configuration and operational parameters including: sensor type, software version number, detection range, AutoSpan level, days since last AutoSpan, estimated remaining sensor life, heater power, heater voltage, raw resistance, mA output, input voltage and sensor ambient temperature.

From the **View Sensor Status** text scroll, hold the magnet over PGM1 or PGM2 until the "→" prompt appears and continue to hold the magnet in place for an additional 3-4 seconds (until the display starts to scroll "Status Is"). The display will scroll the complete list of sensor status parameters sequentially:

Sensor Model Type
The menu item appears as: "700 TP"

Current Software Version
The menu item appears as: "V X.XXZ"

Range of Detection.
The menu item appears as: "Range XXXppm"

Serial ID address.
The menu item appears as: "Serial ID XX"

AutoSpan Level.
The menu item appears as: "Auto Span Level XXppm"

Days Since Last AutoSpan.
The menu items appears as: "Last Cal XX days"

Remaining Sensor Life.
The menu item appears as: "Sensor Life 100%"

Sensor Heater Power
The menu item appears as: "Heater XXXmW"

Sensor Heater Voltage
The menu item appears as: "Heater X.XXVDC

Raw Sensor Resistance
The menu item appears as: "Resistance XXXXX"

mA Output
The menu item appears as: "mA Output XX.XX mA"

Input Voltage Supply

The menu item appears as: “Voltage XX.X VDC”

Operating Temperature

The menu item appears as: “Temp XX C”

When the status list sequence is complete, the ITM will revert to the “View Sensor Status” text scroll. The user can either: 1) review list again by executing another 3-4 second hold, 2) move to another menu item by executing a momentary hold over PGM1 or PGM2, or 3) return to Normal Operation via automatic timeout of about 15 seconds (the display will scroll “View Sensor Status” 4 times and then return to Normal Operation).

7.3.5.3 Set AutoSpan Level

Set AutoSpan Level is used to set the span gas concentration level that is being used to calibrate the sensor. This level is adjustable from 10% to 50% of selected full-scale range. The current setting can be viewed in View Program Status.

The menu item appears as: “**Set AutoSpan Level**”.

From the **Set AutoSpan Level** text scroll, hold the magnet over PGM1 or PGM2 until the “➔” prompt appears and continue to hold the magnet in place for an additional 3-4 seconds (until the display starts to scroll “Set Level”). The display will switch to “ XX“ (where XX is the current gas level). Swipe the magnet momentarily over PGM2 to increase or PGM1 to decrease the AutoSpan Level until the correct level is displayed. When the correct level is achieved, hold the magnet over PGM1 or PGM2 for 3-4 seconds to accept the new value. The display will scroll “Level Saved”, and revert to “Set AutoSpan Level” text scroll.

Move to another menu item by executing a momentary hold, or return to Normal Operation via automatic timeout of about 15 seconds (the display will scroll “Set AutoSpan Level” 4 times and then return to Normal Operation).

7.3.5.4 Set Range

Set Range is used to change full-scale ranges. This is selectable between 0-20, 0-50, 0-100ppm, and 0-200ppm. The current range can be viewed in View Sensor Status using instruction given in Section 7.3.5.2.

The menu item appears as: “**Set Range**”.

From the “**Set Range”** text scroll, hold the programming magnet over PGM1 or PGM2 until the “➔” prompt appears and continue to hold the magnet in place for an additional 3-4 seconds (until the display starts to scroll “Set Range”). The display will then switch to “XXX“ (where XXX is the current

Range). Swipe the magnet momentarily over PGM2 to increase or PGM1 to decrease the range Level until the desired range is displayed. Hold the magnet over PGM1 or PGM2 for 3 seconds to accept the new value. The display will scroll "Range Saved", and revert to "Set Range" text scroll.

Move to another menu item by executing a momentary hold, or, return to Normal Operation via automatic timeout of about 15 seconds (the display will scroll "Set Range" 7 times and then return to Normal Operation).

NOTE: When switching between ranges, it may be necessary to readjust the AutoSpan Level.

7.3.5.5 Set Serial ID

Detcon Model TP-700 sensors can be polled serially via RS-485 Modbus™ RTU. Refer to Section 7.4 for details on using the Modbus™ output feature.

Set Serial ID is used to set the Modbus™ serial ID address. It is adjustable from 01 to 256 in hexadecimal format (01-FF hex). The current serial ID can be viewed in View Sensor Status using the instruction given in Section 7.3.5.2.

The menu item appears as: "**Set Serial ID**".

From the "**Set Serial ID"** text scroll, hold the programming magnet over PGM1 or PGM2 until the "→" prompt appears and continue to hold the magnet in place for an additional 3-4 seconds (until the display starts to scroll "Set ID"). The display will then switch to " XX" (where XX is the current ID address). Swipe the magnet momentarily over PGM2 to increase or PGM1 to decrease the hexadecimal number until the desired ID is displayed. Hold the magnet over PGM1 or PGM2 for 3-4 seconds to accept the new value. The display will scroll "ID Saved", and revert to "Set Serial ID" text scroll.

Move to another menu item by executing a momentary hold, or, return to Normal Operation via automatic timeout of about 15 seconds (the display will scroll "Set Serial ID" 5 times and then return to Normal Operation).

7.3.5.6 Set Heater Power

Set Heater Power is used to set the each H_2S sensor to the optimum operating temperature. This function is performed during factory calibration of each TP-700 sensor assembly, and is not necessary during installation. However, it is necessary to perform in the field if the plug-in H_2S sensor is replaced or if the Restore Factory Defaults function has been executed.

The menu item appears as: "**Set Heater Power**".

NOTE: "Set Heater Power" is only necessary after new plug-in H_2S sensor installation or after use of the "Restore Factory Defaults" function. A full 3-4 second magnet hold on PGM1 or PGM 2 is required to execute this function.

From the "Set Heater Power" text scroll, hold the programming magnet over PGM1 or PGM2 until the "➔" prompt appears and continue to hold the magnet in place for an additional 3-4 seconds (until the display starts to scroll "Setting Heater"). After scrolling "Setting Heater", the ITM will adjust the Heater power. The sequence should require about 2-minutes. When the cycle is complete, the ITM will revert to the "Set Heater Power" text scroll.

NOTE: If the ITM cannot adjust the heater power within 3 minutes an error message, "Can't set, Reverting to Default", will be scrolled. Refer to section 7.7.

Move to another menu item by executing a momentary hold, or, return to Normal Operation via automatic timeout of about 15 seconds (the display will scroll "Set Heater Power" 4 times and then return to Normal Operation).

The current values for heater power and heater voltage can be observed in the "View Sensor Status" menu. The target heater power setting at 25C operating temperature is 235 +/- 5mW. At the operating temperature extremes the observed heater power settings will vary according to the data below:

50°C	normal heater power range is 215 +/- 5mW
0°C	normal heater power range is 260 +/- 5mW
-20°C	normal heater power range is 275 +/- 5mW
-40°C	normal heater power range is 295 +/- 5mW

7.3.5.7 Signal Output Check

Signal Output Check provides a simulated 4-20mA output and RS-485 Modbus™ output. This simulation allows the user to conveniently perform a functional system check of their entire safety system. This signal output simulation also aids the user in performing troubleshooting of signal wiring problems.

The menu item appears as: "**Signal Output Check**".

From the "Signal Output Check" text scroll, hold the magnet over PGM1 or PGM2 until the "➔" prompt appears and then hold continuously for an additional 10 seconds. Once initiated, the display will scroll "Simulation Active" until the function is stopped. During simulation mode, the 4-20mA value will be increased from 4.0mA to 20.0mA (in 1% of range increments at about a 1 second update rate) and then decreased from 20.0mA to 4.0mA. The same simulation sequence is applied to the Modbus™ output gas reading.

NOTE: Signal Output Check stays active indefinitely until the user stops the function. There is no automatic timeout for this feature.

To end simulation mode, hold magnet over PGM1 or PGM2 for 3 seconds. The display will either move to the prior menu item or move to the next menu item respectively.

Move to another menu item by executing a momentary hold, or, return to Normal Operation via automatic timeout of about 15 seconds.

7.3.5.8 Restore Factory Defaults

Restore Factory Defaults is used to clear current user configuration and calibration data from memory and revert to factory default values. This may be required if the settings have been configured improperly and a known reference point needs to be re-established to correct the problem.

This menu item appears as: "**Restore Defaults**".

NOTE: "Restoring Factory Defaults" should only be used when absolutely necessary. All previously existing configurational inputs will have to be re-entered if this function is executed. A full 10-second magnet hold on PGM 2 is required to execute this function.

From the "Restore Defaults" text scroll, hold the programming magnet over PGM2 until the "➔" prompt appears and continue to hold 10 seconds. The display will scroll "Restoring Defaults", and then will revert to the "Restore Defaults" text scroll.

Move to another menu item by executing a momentary hold, or, return to Normal Operation via automatic timeout of about 15 seconds (the display will scroll "Restore Defaults" 4 times and then return to Normal Operation).

Following the execution of "**Restore Defaults**", the TP-700 will revert to its factory default settings. The default settings are:

- Serial ID = 01. The Serial ID must be set appropriately by the operator (7.3.5.5).

NOTE: The following must be performed in order before the sensor can be placed in operation.

- Range = 100ppm. Range must be set appropriately by the operator (7.3.5.4).
- AutoSpan Level = 25ppm. AutoSpan level must be set appropriately by the operator (7.3.5.3).
- Heater Power: Heater Power settings are lost and "Set Heater Power" (7.3.5.6) must be performed before "AutoSpan".
- AutoSpan: AutoSpan Settings are lost and a successful "AutoSpan" must be performed before placing the Sensor into operation (7.3.5.3).

7.3.6 Program Features

Detcon TP-700 H_2S gas sensors incorporate a comprehensive set of diagnostic features to achieve Fail-Safe Operation. These Operational features and Failsafe Diagnostic features are detailed below.

7.3.6.1 Operational Features

Over-Range
When gas greater than the full-scale range is detected, the ITM display will continuously flash the full-scale reading (20, 50, 100ppm, 200ppm). This designates an over-range condition. The 4-20mA signal will report a 22mA output during this time.

In-Calibration Status
When the sensor is engaged in AutoSpan calibration, the 4-20mA output signal is taken to 2.0mA and the in-calibration Modbus™ Status Register bit 14 is set. This alerts the user that the ITM is not in an active measurement mode. This feature also allows the user to log the AutoSpan events via their master control system.

Sensor Life
Sensor Life is calculated after each AutoSpan calibration and is reported as an indicator of remaining service life. It is reported in the "View Sensor Status" menu and as a RS-485 Modbus™ register bit. Sensor Life is reported on a scale of 0-100%. When Sensor Life falls below 25%, the sensor cell should be replaced within a reasonable maintenance schedule.

Last AutoSpan Date
This reports the number of days that have elapsed since the last successful AutoSpan. This is reported in the View Sensor Status menu. After 180 days, an AutoSpan Fault will be declared.

7.3.6.2 Fault Diagnostic/Failsafe Features

Fail-Safe/Fault Supervision

Model TP-700 MicroSafe™ sensors are designed for Fail-Safe operation. If any of the diagnostic faults listed below are active, the ITM Display will scroll the message "Fault Detected" every 30 seconds during normal operation. At any time during "Fault Detected" mode, holding the programming magnet over PGM1 or PGM2 for 1 second will display the active fault(s). All active faults are reported sequentially.

Most fault conditions result in failed operation of the sensor. In these cases the 4-20mA signal is dropped to the universal fault level of 0mA. These include the AutoSpan Calibration faults, Heater Fault, Sensor Fault, Processor Fault, Memory Fault, Loop Fault, and Input Voltage Fault. (The 0mA fault level is not employed for a Temperature Fault, or during Calibration.) For every diagnostic fault condition the associated RS-485 Modbus™ fault register will be flagged to alert the user digitally.

NOTE: Refer to the Troubleshooting Guide, Section 7.7, for guidance on fault conditions.

Range Fault – AutoSpan

If the sensor fails the minimum signal change criteria during AutoSpan sequence (Section 7.2.4), the "Range Fault" will be declared. A "Range Fault" will cause a "Fault Detected" message to scroll once a minute on the ITM display and drop the 4-20mA output to 0mA. The Modbus™ fault register bit for Range Fault will be set and will not clear until the fault condition has been cleared. The sensor should be considered "Out-of-Service" until a successful AutoSpan calibration is performed.

Stability Fault - AutoSpan

If the sensor fails the signal stability criteria during AutoSpan sequence (Section 7.2.4), the "Stability Fault" will be declared. A "Stability Fault" will cause a "Fault Detected" message to scroll once a minute on the ITM display and drop the mA output to 0mA. The Modbus™ fault register bit for Stability Fault will be set and will not clear until the fault condition has been cleared. The sensor should be considered as "Out-of-Service" until a successful AutoSpan calibration is performed.

Clearing Fault - AutoSpan

If the sensor fails the signal stability criteria during AutoSpan sequence (Section 7.2.4), the "Clearing Fault" will be declared. A "Clearing Fault" will cause a "Fault Detected" message to scroll once a minute on the ITM display and drop the mA output to 0mA. The Modbus™ fault register bit for Clearing Fault will be set and will not clear until the fault condition has been cleared. The sensor should be considered as "Out-of-Service" until a successful AutoSpan calibration is performed.

Open Heater Fault

If the sensor heater should fail and become electrically open, a "Heater Fault" will be declared. A "Heater Fault" will cause a "Fault Detected" message to scroll once a minute on the ITM display. The Modbus™ fault register bit for Heater Fault will be set and will not clear until the fault condition has been cleared. If a Heater Fault occurs, the 4-20mA signal will be set at 0mA until the fault condition is resolved.

Open Sensor Fault

If the sensor film should fail and become electrically open, a "Sensor Fault" is declared. A "Sensor Fault" will cause a "Fault Detected" message to scroll once a minute on the ITM display. The Modbus™ fault register bit for Sensor Fault will be set and will not clear until the fault condition has been cleared. If a Sensor Fault occurs, the 4-20mA signal will be set at 0mA until the fault condition is resolved.

Processor Fault

If the detector has any unrecoverable run-time errors, a "Processor Fault" is declared. A "Processor Fault" will cause a "Fault Detected" message to scroll once a minute on the ITM display. The Modbus™ fault register bit for Processor Fault will be set and will not clear until the fault condition has been cleared. If a Processor Fault occurs, the 4-20mA signal will be set at 0mA until the fault condition is resolved.

Memory Fault

If the detector has a failure in saving new data to memory, a "Memory Fault" is declared. A "Memory Fault" will cause the "Fault Detected" message to scroll once a minute on the ITM display. The Modbus™ fault register bit for Memory Fault will be set and will not clear until the fault condition has been cleared. If a Memory Fault occurs, the 4-20mA signal will be set at 0mA until the fault condition is resolved.

4-20mA Loop Fault

If the sensor detects a condition where the 4-20mA output loop is not functional (high loop resistance or failed circuit function) a "4-20mA Fault" is declared. A "4-20mA Fault" will cause the "Fault Detected" message to scroll once a minute on the ITM display. The Modbus™ fault register bit for Loop Fault will be set and will not clear until the fault condition has been cleared. If a Loop Fault occurs, the 4-20mA signal will be set at 0mA until the fault condition is resolved. If the 4-20mA current loop is still out of tolerance, contact Detcon at Detcon-service@teledyne.com, or contact Detcon customer service.

NOTE: If the 4-20mA output is not being used, the Green wire from the sensor *must* be connected to the Black wire at the (-) terminal on the Transient Protection Module to ensure RS-485 communication is not disrupted by a 4-20mA Fault.

Input Voltage Fault

If the detector is currently receiving an input voltage that is outside of the 11.5-28VDC range, an "Input Voltage Fault" is declared. An "Input Voltage Fault" will cause the "Fault Detected" message to scroll once a minute on the ITM display. The fault register bit for Input Voltage Fault will be set and will not clear until the fault condition has been cleared. If an Input Voltage Fault occurs, the 4-20mA signal will be set at 0mA until the fault condition is resolved.

Temperature Fault

If the detector is currently reporting an ambient temperature that is outside of the –40°C to +75°C range, a "Temperature Fault" is declared. A "Temperature Fault" will cause the "Fault Detected" message to scroll once a minute on the ITM display. The Modbus™ fault register bit for Temperature Fault will be set and will not clear until the fault condition has been cleared. If a Temperature Fault occurs, the 4-20mA signal remains operational.

AutoSpan Fault

If 180 days has elapsed since the last successful AutoSpan, an AutoSpan Fault will be generated. An "AutoSpan Fault" will cause the "Fault Detected" message to scroll once a minute on the ITM display. The Modbus™ fault register bit for AutoSpan Reminder Fault will be set and will not clear until the fault condition has been cleared. If an AutoSpan Reminder Fault occurs, the 4-20mA signal remains operational.

RS-485 Modbus™ Protocol

Model DM-700 sensors feature Modbus™ compatible communications protocol and are addressable via the program mode. Other protocols are available. Contact the Detcon factory for specific protocol requirements. Communication is two wire, half duplex 485, 9600 baud, 8 data bits, 1 stop bit, no parity, with the sensor set up as a slave device. A master controller up to 4000 feet away can theoretically poll up to 256 different sensors. This number may not be realistic in harsh environments where noise and/or wiring conditions would make it impractical to place so many devices on the same pair of wires. If a multi-point system is being utilized, each sensor should be set for a different address. Typical address settings are: 01, 02, 03, 04, 05, 06, 07, 08, 09, 0A, 0B, 0C, 0D, 0E, 0F, 10, 11…etc.

Sensor RS-485 ID numbers are factory default to 01. These can be changed in the field via the Operator Interface described in Section 7.3.5.5.

The following section explains the details of the Modbus™ protocol that the DM-700 sensor supports.

Code 03 - Read Holding Registers is the only code supported by the transmitter. Each transmitter contains 6 holding registers which reflect its current status.

Table 17 Modbus™ Registers

FC	REG	Content Description	R/W	Content Definition		
				Value	Meaning	Range
03	40000	Device Type	R	8	700 Sensor	
03 06	40001 40001	Read Detectable Range[1,2] Write Detectable Range	R/W	100 10000	For 0-100 For 0-10000[2]	DM – 0 to 10000 FP – Read only TP – 20, 50, 100, 200 IR – 0 to 10000 PI – 0 to 10000
03	40002	Read Concentration[3,2]	R	1000	Bound by range. If > range, this value is in fault.	
03 06	40003 40003	Read AutoSpan Level[4,2] Write AutoSpan Level	R/W	50	Span gas at 50	DM – 1% to 95% of Range (40001) FP – 5% to 95% of Range (40001) TP – 2% to 50% of Range (40001) IR – 5% to 95% of Range (40001) PI – 1% to 95% of Range (40001)

FC	REG	Content Description	R/W	Content Definition		
				Value	**Meaning**	**Range**
03	40004	Read Sensor Life	R	85	For 85% sensor life	
03	40005	Read Fault Status Bits[5]	R	0x0001 0x0002 0x0004 0x0008 0x0010 0x0020 0x0040 0x0080 0x0100 0x0200 0x0400 0x0800 0x1000 0x2000 0x4000 0x8000	Global Fault Auto Span Fault Temperature Fault 4-20mA Fault Input Voltage Fault Memory Fault Processor Fault Clearing Fault Stability Fault Range Fault Sensor Fault Zero Fault Sensor Fault 2 <reserved> In Calibration Communication Error	
03	40006	Read Model #	R	1, 2, 3, 4, 5	DM, FP, IR, TP, PID respectively	
03	40007	Read Days Since Cal	R	29	29days	
03	40008	4-20 Current Output mA x100	R	400	4.00mA	**Range**
03	40009	Read Input Voltage V x100	R	2400	24.00V	
03	40010	Read Temperature	R	28	28 °C	
03/06	40011	Special #1	R/W		Function dependent on value of 40006 (See Special Register Table 4)	
03/06	40012	Special #2	R/W		Function dependent on value of 40006 (See Special Register Table 4)	

FC	REG	Content Description	R/W	Content Definition		
				Value	Meaning	Range
03	40013	Special #3	R		Function dependent on value of 40006 (See Special Register Table 4)	
03/ 06	40014	Special #4	R/W		Function defendant on value of 40006 (See Special Register Table 4)	
03	40015	Calibration Status	R	0x0000	Idle	
				0x0001	Zero Calibration Started	
				0x0002	Span Calibration Started	
				0x0003	Span Set	
				0x0004	Span Calibration Unsuccessful	
06	40015	Calibration Enable	W	0x0001	Set Zero	
				0x0002	Set Span	
				0x0008	Signal simulation mode	
				0x0009	Set FP Bridge Voltage	
				0x000A	Set TP Heater Power	
				0x000B	Set IR Gain	
03	40016	Read Text 1, first char in L	R		Two Char of Gas/Units String[6]	
03	40017	Read Text 2	R		Two Char of Gas/Units String[6]	
03	40018	Read Text 3	R		Two Char of Gas/Units String[6]	
03	40019	Read Text 4	R		Two Char of Gas/Units String[6]	
03	40020	Read Text 5, last char in H	R		Two Char of Gas/Units String[6]	
03	40021	Text null terminator in L	R		Two Char of Gas/Units String[6]	

Integer ranges from 1 all the way to 10,000.

[2] Units are determined by "units" field in the "notation" string

[3] Gas Reading times one *(x 1)* with units in notation string for "Low Range" = 0. Gas Reading times one *(x 10)* with units in notation string for "Low Range" = 1. Gas Reading times one *(x 100)* with units in notation string for "Low Range" = 2.

[4] Span Gas must be less than or equal to Detectable Range and is usually about ½ of it.

[5] Fault status bits self-reset when fault clears

[6] Text in ASCII, in order L byte, H byte, L byte… See field descriptions of notation string.

Gas/Units String

Character #	1	2	3	4	5	6	7	8	9	10	11
Description	Units			0x20	Gas Type						0x00

Units – This field is 'PPM', 'PPB', or '_ _ %' (where ' _ ' is a space, 0x20).

0x20 – The units filed is terminated with an ASCII space (0x20)

Gas Type – This field contains the gas type of the cell. Any ASCII string is permissible

0x00 – The notation string is terminated with an ASCII null character

Table 18 Modbus™ Special Registers

REG	DM (40006 = 1)		FP (40006 = 2)	IR (40006 = 3)	TP (40006 = 4)[1]	PI (40006 = 5)	
40011	Low Range= 0, 1, 2 0: Range >25 (0 decimal place) 1: Range 10-25 (1 decimal place) 2: Range <10 (2 decimal place)		Gas Factor **(R/W)** **Range = 79 to 565**	Gas Factor **(R/W)** **Range = 20 to 565**	Heater Power (mW) **(R/W)**	Low Range= 0, 1, 2 0: Range >25 1: Range 10-25 2: Range <10	
40012	0x8XXX 0x0XXX 0xX000 0xX096 0xX0C8 0xX12C	Positive Polarity Cell Negative Polarity Cell Bias = 0mV Bias = 150mV Bias = 200mV Bias = 300mV	Cal Factor **(R/W)** **Range = 79 to 565**	Active Counts	Heater Voltage (mV)	0x8XXX 0x0XXX 0xX000 0xX096 0xX0C8 0xX12C	Positive Polarity Cell Negative Polarity Cell Bias = 0mV Bias = 150mV Bias = 200mV Bias = 300mV
40013	Gain Code (integer between 0 & 15)		Bridge Current (mA)	Reference Counts	Sensor Resistance (x100 Ω)	Gain Code	
40014	Raw Counts 0-0xFFFF (0x8000 = nominal 0)		Bridge Voltage (mV) **(Read only)**	Range Divisor 1,10,100, or 1000	Heater Current (mA)	Raw Counts	

Only possible ranges are 20, 50, 100, 200. Modbus register 40001 will contain either 20, 50, 100, or 200, range divisor is not necessary.

7.4 Service and Maintenance

7.4.1 Calibration Frequency

In most applications, monthly to quarterly span calibration intervals will assure reliable detection. However, industrial environments differ. Upon initial installation and commissioning, close frequency tests should be performed, weekly to monthly. Test results should be recorded and reviewed to determine a suitable calibration interval. If, after 180 days, an AutoSpan Calibration is not performed, the ITM will generate an AutoSpan Fault.

7.4.2 Visual Inspection

The Sensor should be inspected annually. Inspect for signs of corrosion, pitting, and water damage. During visual inspection, the Splash Guard should be inspected to insure that it is not blocked. Examine the porous 316SS flame arrestor within the sensor's bottom housing for signs of physical blockage or severe corrosion. Also, inspect inside the Junction Box for signs of water accumulation or Terminal Block corrosion.

7.4.3 Condensation Prevention Packet

A moisture condensation packet should be installed in every explosion proof Junction Box. The moisture condensation prevention packet will prevent the internal volume of the J-Box from condensing and accumulating moisture due to day-night humidity changes. This packet provides a critical function and should be replaced annually. Detcon's PN is 960-202200-000.

NOTE: A desiccant cap with a desiccant packet is attached to the sensor cell housing to avoid damage during storage and shipping. This prevents water from contacting the sensor film, and as a result helps to retain the stability of the factory span calibration.

NOTE: Store the desiccant caps with the desiccant packets in a sealed container (i.e. zip-lock bag) for future use. It is advisable (but not mandatory) to reinstall the desiccant cap and packet during prolonged periods without power (more than 1 day is considered "prolonged"). An active desiccant packet is blue in color and turns pink when consumed. (P/N 960-399800-000 Package of 10)

7.4.4 Replacement of Plug-in H_2S Sensor

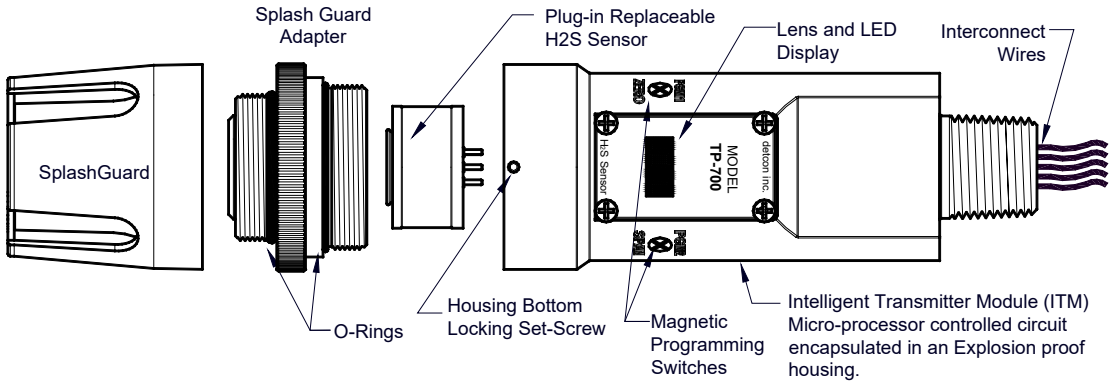

Figure 55 Sensor Assembly

a) Remove power to TP-700 sensor by lifting the + 24VDC wire in J-Box.

NOTE: It is necessary to remove power while changing the plug-in H_2S sensor in order to maintain area classification.

b) Use a M1.5 Allen wrench to release the locking setscrew that locks the ITM and bottom housing together (One turn will suffice - Do not remove setscrew completely).

c) Remove splashguard. Unthread and remove the Bottom Housing from the ITM.

d) Gently pull the plug-in H_2S sensor cell out of the ITM. Orient the new plug in sensor so that it matches with the female connector pins. It may be necessary to look from below to assure alignment is correct. When properly aligned, press the sensor in firmly to make the proper connection.

NOTE: The previous plug-in H_2S sensor cell did not use a Face seal o-ring design. If you are installing this new face seal o-ring version to replace an older revision sensor, you must fully remove the adhesive gasket from the inside of bottom housing first

e) Thread the Bottom Housing onto the ITM to a snug fit and tighten the locking setscrew using the 1/16" Allen wrench. Reinstall the splashguard.

f) Perform "Set Heater Power (Section 7.3.5.6 to match the new sensor with the ITM.

g) Perform a successful AutoSpan to match the new sensor with the ITM (Section 7.3.5.3).

7.4.5 Replacement of ITM

a) Remove the power source from the sensor assembly. Disconnect all sensor wire connections at the J-Box taking note of the wire connections.

NOTE: It is necessary to remove power to the J-Box while changing the ITM in order to maintain area classification.

b) Use a wrench and the wrench flats provided at the top section of the ITM and unthread the ITM until it can be removed.

c) Use a M1.5 Allen wrench to release the locking setscrew that locks the ITM and bottom housing together (One turn will suffice - Do not remove setscrew completely).

d) Remove splashguard. Unthread and remove the Bottom Housing from the ITM.

e) Gently remove the plug-in H_2S sensor from the old ITM and install it in the new ITM. Orient the plug-in sensor so that it matches with the female connector pins on the new ITM and press the sensor in firmly to make proper connection.

f) Thread the bottom housing onto the ITM until snug, tighten the locking setscrew and reconnect splashguard.

g) Feed the sensor assembly wires through the ¾" female NPT mounting hole and thread the assembly into the J-box until tight and the ITM lens faces toward the front access point. Connect the sensor assembly wires inside J-Box (Refer to Section 7.2.6, and Figure 51).

h) Perform Set Range, Set Serial ID, Set Heater Power, Set AutoSpan Level and perform a successful AutoSpan before placing sensor assembly into operation.

7.4.6 Replacement of TP-700 Sensor Assembly

a) Remove the power source from the sensor assembly. Disconnect all sensor wire connections at the J-Box .

NOTE: It is necessary to remove power to the J-Box while changing the TP-700 sensor in order to maintain area classification.

b) Use a wrench and the wrench flats provided at the top section of the ITM and unthread the ITM until it can be removed.

c) Use a M1.5 Allen wrench to release the locking setscrew that locks the ITM and bottom housing together (One turn will suffice - Do not remove setscrew completely).

d) Remove splashguard. Unthread and remove the Bottom Housing from the ITM.

e) Feed the new TP-700 sensor assembly wires through the ¾" female NPT mounting hole and thread the assembly into the J-box until tight and the ITM lens faces toward the front access point. Connect the sensor assembly wires inside J-Box (Refer to Section 7.3.4, and Figure 51).

f) TP-700 sensors are factory calibrated, however, they require an initial AutoSpan calibration (section 7.3.4), and must be configured per customer specific application requirements.

7.4.7 Replacement of the Bottom Housing

NOTE: If the porous Flame Arrestor becomes blocked, corroded, or compromised the Bottom Housing must be replaced because the Flame Arrestor is bonded to the housing.

a) Remove the splashguard.

b) Use a M1.5 Allen wrench to release the locking setscrew that holds the ITM and bottom housing together (One turn will suffice - Do not remove the setscrew completely). Grab the knurled section of the bottom housing and unthread until removed.

c) Thread up the bottom housing until snug, reconnect the splashguard, and tighten the locking setscrew.

d) Re-install the splashguard.

e) It is advised to perform an AutoSpan Calibration after replacing the Bottom Housing (section 7.3.4).

7.5 Troubleshooting Guide

Refer to the list of Failsafe Diagnostic features listed in Section 7.3.6.2 for additional reference in troubleshooting activities. Listed below are some typical trouble conditions and their probable cause and resolution path.

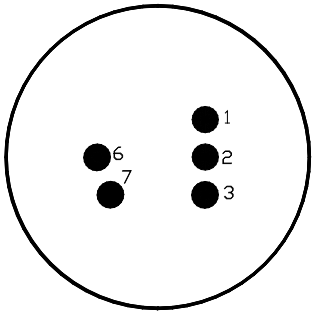

Figure 56 Sensor PCB

Open Heater
Probable Cause: Plug-in sensor has failed

- Remove plug-in H_2S sensor and verify resistance between PIN 2 and PIN 3 (Shown in Figure 56) using an ohmmeter. At room temperature, the heater film's normal reading should range between 65 and 95 ohms.
- Replace the plug-in H_2S sensor if open circuit or significantly out-of range readings are found.

Open Sensor
Probable Cause: Plug-in sensor has failed

- Remove plug-in H2S sensor cell and verify resistance between PIN 6 and PIN 7 (Shown in Figure 56) using an ohmmeter. At room temperature, the sensor film's normal reading range should be 10-100 k-ohms. For sensors with an "X" in the serial number, the normal reading range should be 75 k-ohms to 2 meg-ohms. Failure would be open circuit.
- Replace the plug-in H_2S sensor cell if an open circuit found.

AutoSpan Calibration Faults – (Range, Stability and Clearing)
To clear any AutoSpan Calibration fault, the AutoSpan process must be completed successfully (Section 7.3.4).

Range Fault

Probable Causes: Failed Sensor, Cal Gas not applied or not applied at appropriate time, problems w/ cal gas and delivery, no Humidifying Tube used, failure to properly desiccant packet the sensor cell during extended power-off periods.

- Check Heater Power Setting (should be 235 +/- 5mW at 25ºC ambient temperature).
- Verify use of span gas Humidifying Tube.
- If using Splashguard with Integral Cal Port, must use Calibration Wind Guard or air movement can compromise span gas delivery.
- Check validity of span gas using H_2S pull tube or other means (check MFG date on cal gas cylinder).
- Check for obstructions through stainless steel flame arrestor (including being wet, blocked, or corroded).
- Replace the plug-in H_2S sensor.

Stability Fault

Probable Causes: Failed Sensor, empty or close to empty Cal Gas Cylinder, problems with cal gas and delivery, or no Humidifying Tube used, failure to properly desiccant packet the sensor cell during extended power-off periods.

- Check Heater Power Setting (should be 235 +/- 5mW at 25ºC ambient temperature).
- Verify use of span gas Humidifying Tube.
- If using Splashguard with Integral Cal Port, must use Calibration Wind Guard or air movement can compromise span gas delivery.
- Check validity of span gas using H_2S pull tube or other means (check MFG date on cal gas cylinder).
- Check for obstructions through stainless steel flame arrestor (including being wet, blocked, or corroded).
- Replace the plug-in H_2S sensor.

Clearing Fault

Probable Causes: Failed Sensor, Cal Gas not removed at appropriate time or problems with cal gas and delivery, presence of background H_2S, or incorrect Heater Power Setting.

- Must recover to < 5ppm in < 5 min after AutoSpan is complete
- Use bottled air (zero air) if there is a known continuous H_2S background level.
- Verify use of span gas Humidifying Tube.
- Check validity of span gas using H_2S pull tube or other means (check MFG date on cal gas cylinder).
- Check for obstructions through stainless steel flame arrestor (including being wet, blocked, or corroded).
- Perform Heater Power Setting.
- Replace the plug-in H_2S sensor.

Poor Calibration Repeatability
Probable Causes: Failed Sensor, use of wrong Cal Gas or problems w/ cal gas and delivery, or Interference Gases

- Check for adequate Sensor Life.
- Check Heater Voltage Setting (should be 235±5mW at 25ºC).
- Verify use of span gas Humidifying Tube.
- Check validity of cal gas using H_2S pull tube or other means (check MFG date on cal cylinder).
- Check for obstructions through stainless flame arrestor (including being wet, blocked, or corroded).
- Evaluate area for presence of any contaminating gases as listed in Section 7.2.3.
- Note the sensor's serial # and report repetitive problems to Detcon's Repair Department.
- Replace plug-in H_2S sensor cell.

Unstable Output/ Sudden spiking
Possible Causes: Unstable power supply, inadequate grounding, or inadequate RFI protection

- Verify Power source is stable.
- Verify field wiring is properly shielded and grounded.
- Contact Detcon to optimize shielding and grounding.
- Add Detcon's RFI Protection Circuit accessory if problem is proven RFI induced.

Nuisance Alarms
- Check condulet for accumulated water and abnormal corrosion on terminal blocks.
- If nuisance alarms are happening at night, suspect condensation in condulet. Add or replace Detcon's Condensation Prevention Packet P/N 960-202200-000.
- Investigate the presence of other target gases that are causing cross-interference signals.
- Determine if cause is RFI induced.

Processor and/or Memory Faults
- Recycle power in attempt to clear problem
- Restore Factory Defaults - This will clear the processor's memory and may correct problem. Remember to re-enter all customer settings for range and cal gas level after Restore Factory Defaults.
- If problem persists, replace the Intelligent Sensor Module.

Unreadable Display
- If due to excessive sunlight, install a sunshade to reduce glare.

Nothing Displayed – Transmitter not Responding
- Verify condulet has no accumulated water or abnormal corrosion.
- Verify required DC power is applied to correct terminals.
- Swap with a known-good ITM to determine if ITM is faulty.

Faulty 4-20mA Output
If Sensor has a normal reading with no Faults displayed, and the 4-20 mA signal output is 0mA….

- Check that wiring is properly connected at terminal blocks and through to controller inputs.
- The 4-20mA output loop must be closed to avoid a Loop Fault. If the 4-20mA output is not being used the green wire from the sensor must be connected to the (-) terminal on the Transient Protection Module to ensure that it does not create a 4-20mA Fault. (section 7.2.6)
- Perform a "Signal Output Check" sequence via Section 7.3.5.7 and verify 4-20mA output with Current Meter.
- Swap with new ITM to determine if the ITM's 4-20mA output circuit is faulty.
- If the 4-20mA current loop is still out of tolerance, contact Detcon at Detcon-service@teledyne.com, or contact Detcon customer service.

No Communication - RS-485 Modbus™
If sensor has a normal reading with no Faults displayed and the Modbus™ is not communicating….

- Verify that the correct (and non-duplicated) serial address is entered (per Section 7.3.5.5).
- Check that the wiring is properly connected at terminal blocks, and the serial loop is wired correctly.
- Perform a "Signal Output Check" per Section 7.3.5.7 and troubleshoot wiring.
- Consider adding a Modbus™ repeater if the distance from the nearest distribution drop is excessive.
- Swap with new ITM to determine if the ITM's serial output circuit is faulty.
- Refer to Detcon's "Guide to Proper Modbus™ Communications" Application Note.

7.6 Customer Support and Service Policy

Detcon
Shipping Address: 4055 Technology Forest Blvd., The Woodlands Texas 77381
Mailing Address: P.O. Box 8067, The Woodlands Texas 77387-8067
Phone: 713.559.9200

- www.teledynegasandflamedetection.com
- detcon-service@teledyne.com
- detcon-sales@teledyne.com

All Technical Service and Repair activities should be handled by the Detcon Service Department via phone or email at contact information given above. RMA numbers should be obtained from the Detcon Service Department prior to equipment being returned. For on-line technical service, customers should have ready the model number, part number, and serial number of product(s) in question.

All Sales activities (including spare parts purchase) should be handled by the Detcon Sales Department via phone or email at contact information given above.

7.6.1 Warranty Notice

Teledyne Detcon Inc. warrants the Model TP-700 H_2S gas sensor to be free from defects in workmanship of material under normal use and service for two years from the date of shipment on the ITM electronics and for a 10 year conditional period on the plug-in H_2S sensor. See Warranty details in section 6.8.

Teledyne Detcon Inc. will repair or replace without charge any such equipment found to be defective during the warranty period. Full determination of the nature of, and responsibility for, defective or damaged equipment will be made by Teledyne Detcon Inc. personnel.

Defective or damaged equipment must be shipped to the Teledyne Detcon Inc. factory or representative from which the original shipment was made. In all cases this warranty is limited to the cost of the equipment supplied by Teledyne Detcon Inc. The customer will assume all liability for the misuse of this equipment by its employees or other contracted personnel.

All warranties are contingent upon the proper use in the application for which the product was intended and does not cover products which have been modified or repaired without Teledyne Detcon Inc. approval, or which have been subjected to neglect, accident, improper installation or application, or on which the original identification marks have been removed or altered.

Except for the express warranty stated above, Teledyne Detcon Inc. disclaims all warranties with regard to the products sold. Including all implied warranties of merchantability and fitness and the express warranties stated herein are in lieu of all obligations or liabilities on the part of Teledyne Detcon Inc. for damages including, but not limited to, consequential damages arising out of, or in connection with, the performance of the product.

7.7 TP-700 Sensor Warranty

7.7.1 Plug-in H_2S Sensor Warranty

Teledyne Detcon Inc. warrants, under normal intended use, each new plug-in H_2S sensor (PN 370-010000-700) for a ten year period under the conditions described as follows: The warranty period begins on the date of shipment to the original purchaser and ends ten years thereafter. The sensor element is warranted to be free of defects in material and workmanship. Should any sensor fail to perform in accordance with published specifications within the warranty period, return the defective part to Detcon, Inc., 4055 Technology Forest Blvd., The Woodlands, Texas 77381, for necessary repairs or replacement.

First 5 years	$35.00 handling charge
6th year	$78.00 handling charge
7th year	$121.00 handling charge
8th year	$164.00 handling charge
9th year	$208.00 handling charge
10th year	$251.00 handling charge
Non-warranty	$295.00 charge

NOTE: The warranty will not be honored if evidence shows that the sensor cell was damaged by moisture exposure due to improper handling and protection during periods of removed power or storage. The sensor cell must be protected during periods of removed power or storage by use of a Dust Cap (P/N 602-003306-0TP) and a Desiccant Packet (P/N 960-240010-000).

Terms & Conditions

- The original serial number must be legible on each sensor element base.
- Shipping point is FOB the Detcon factory.
- Net payment is due within 30 days of invoice.
- Detcon, Inc. reserves the right to refund the original purchase price in lieu of sensor replacement.

7.7.2 ITM Electronics Warranty

Teledyne Detcon Inc. warrants, under intended normal use, each new Model 700 ITM to be free from defects in material and workmanship for a period of two years from the date of shipment to the original purchaser. All warranties and service policies are FOB the Detcon facility located in The Woodlands, Texas.

7.7.3 Terms & Conditions

- The original serial number must be legible on each ITM.
- Shipping point is FOB the Detcon factory.
- Net payment is due within 30 days of invoice.
- Detcon, Inc. reserves the right to refund the original purchase price in lieu of ITM replacement.

7.8 Appendix

7.8.1 Specifications

Sensor Type:	Continuous diffusion/adsorption type CHEMFET Solid State MOS type True plug-in replaceable type
Sensor Life:	5-10 years typical
Measuring Ranges:	0-20ppm, 0-50ppm, 0-100ppm
Accuracy/ Repeatability:	± 10% of reading or ± 2ppm (whichever is greater)
Response Time:	T50 < 30 seconds, T80 < 60 seconds
Outputs	Linear 4-20mA DC RS-485 Modbus™ RTU
Ingress Protection	NEMA 4X, IP66
Safety Approvals:	cCSAus Complies with ISA 92.00.01 Part 1-1998; Performance Requirements for H2S CE Marking SIL2 FMEDA Rating
Warranty:	Sensor – 10 year conditional Transmitter – 2 years

Environmental Specifications

Operating Temperature:	-40°F to +158°F; -40°C to +70°C FM ISA 92.00.01 tested from -40°C to +65°C for H2S
Storage Temperature:	-31°F to +131°F; -35°C to +55°C
Operating Humidity:	5-100% RH (Non-condensing)
Operating Pressure Range:	Atmospheric ± 10%

Mechanical Specifications

Dimensions	7"H x 2.2" Dia.; 178mmH x 65mm Dia. (sensor assembly only) 11"H x 6.1"W x 3.75"D; 280mmH x 155mmW x 96mmD (with junction box) Mounting holes (J-box) 5.5"; 140mm center to center
Weight:	2 lbs; 0.907kg (sensor only) 6 lbs; 2.72kg (w/aluminum j-box) 9 lbs; 4.08kg (w/stainless steel j-box)

Electrical Specifications

Input Voltage:	11-30 VDC
Power Consumption:	Normal operation = 68mA (<1.7 watt) Maximum = 85mA (2 watts)
Inrush current:	1.0A @ 24V
RFI/EMI Protection:	Complies with EN50270:2015
Analog Output:	Linear 4-20mA DC current (1000 ohms maximum loop load @ 24VDC)

0mA	All Fault Diagnostics
2mA	In-Calibration
4-20mA	0-100% full-scale
22mA	Over-range condition

Serial Output:	RS-485 Modbus™ RTU
Baud Rate:	9600 BPS (9600,N,8,1 Half Duplex)
Status Indicators:	4-digit LED Display with gas concentration full-script menu prompts for AutoSpan, Set-up Options, and Fault Reporting
Faults Monitored:	Heater, Loop, Input Voltage, Sensor, Processor, Memory, Calibration
Cable Requirements:	Power/Analog: 3-wire shielded cable Maximum distance is 13,300 feet with 14 AWG Serial Output: 2-wire twisted-pair shielded cable specified for RS-485 use Maximum distance is 4,000 feet to last sensor
I/O Protection:	Over-Voltage, Miss-wiring, EMI/RFI Immunity

7.8.2 Spare Parts, Sensor Accessories, Calibration Equipment

Part Number	Spare Parts
927-015500-100	TP-700 Intelligent Sensor Module (ITM)
602-003280-000	TP 700 Housing Bottom Assembly (includes Flame Arrestor)
370-010000-700	Replacement Plug-in H_2S sensor
500-003087-100	Transient Protection PCA
602-003306-0TP	Dust Cap 1.5" Thread with Desiccant Pack
960-202200-000	Condensation Prevention Packet (for J-Box replace annually)
960-240010-000	Desiccant Protection Packet for Cell
Sensor Accessories	
897-850800-010	NEMA 7 Aluminum Enclosure less cover – 3 port
897-850400-010	NEMA 7 Aluminum Enclosure Cover (Blank)
897-850801-316	NEMA 7 316SS Enclosure less cover – 3 port
897-850401-316	NEMA 7 316SS Enclosure Cover (Blank)
613-120000-700	Sensor Splashguard with integral Cal-Port
602-003306-0TP	Dust Cap 1.5" Thread with Desiccant Pack
943-002273-000	Hazardous location dust guard
327-000000-000	Programming Magnet
960-202200-000	Condensation Prevention Packet (for J-Box replace annually)
960-240010-000	Desiccant Protection Packet for Cell
Calibration Accessories	
943-000000-000	Calibration Wind Guard
985-241100-321	In-Line Humidifying Tube
943-000006-132	Threaded Calibration Adapter
943-020000-000	Span Gas Kit: Includes calibration adapter, In-Line Humidifying Tube, 200cc/min fixed flow regulator, and carrying case. (Does Not include gas).
942-010112-010	Span Gas cylinder: 10ppm H_2S in air (for 20ppm range) Contains 58 liters of gas and is good for 80 calibrations
942-010112-025	Span Gas cylinder: 25ppm H_2S in air (for 50 and 100ppm ranges). Contains 58 liters of gas and is good for 80 calibrations
943-090005-502	200cc/min Fixed Flow Regulator for span gas bottle
943-000GMI-CAP	TP-700 Adapter Cover used with General Monitors glass ampoule breaking cup.
Recommend Spare Parts for 2 Years	
927-015500-100	TP-700 Intelligent Sensor Module (ITM)
602-003280-000	Housing Bottom Assembly (includes Flame Arrestor)
370-010000-700	Replacement Plug-in H_2S sensor
500-003087-100	Transient Protection PCA
960-202200-000	Condensation prevention packet (for J-Box replace annually)

8. Detcon Model PI-700

PI-700 VOC Gas Sensors

This manual covers all ranges of PID based VOC Sensors

TELEDYNE DETCON, Inc.
4055 Technology Forest Blvd.,
The Woodlands, Texas 77381
Phone 713.559.9200

WWW.TELEDYNEGASANDFLAMEDETECTION.COM

8.1 Introduction

8.1.1 Description

Detcon Model PI-700 VOC gas sensors are non-intrusive "Smart" sensors designed to detect and monitor a wide range of VOC and Toxic gasses in air. Ranges of detection for target gasses are from 0-1ppm up to 0-5,000ppm. The sensor features an LED display of current reading, fault and calibration status. The Sensor is equipped with standard analog 4-20mA and Modbus™ RS-485 outputs. A primary feature of the sensor is its method of automatic calibration, which guides the user through each step via fully scripted instructions displayed on the LED display.

The microprocessor-supervised electronics are packaged in an encapsulated module and housed in an explosion proof casting, called the ITM (Intelligent Transmitter Module). The ITM includes a four character alpha/numeric LED used to display sensor readings, and the sensor's menu driven features when the hand-held programming magnet is used.

Sensor Technology

The sensors are based on plug-in replaceable miniature PID (Photo-Ionization Detector) sensor technology. The sensor is sensitive to ambient gases that have ionization potentials of < 10.6eV, making it highly sensitive but extremely non-specific. The sensor responds to most toxic VOC compounds and many other toxic gases as well. The sensor is comprised of a UV lamp covered by a specific optical filter which projects only radiation in the 10.6eV range. Target gases that diffuse into the sensor chamber with ionization potentials of < 10.6eV, are ionized by the radiation and give up free electrons. The free electrons are captured by the high voltage collection grid and provide a current that is directly proportional to the concentration of the target gas.

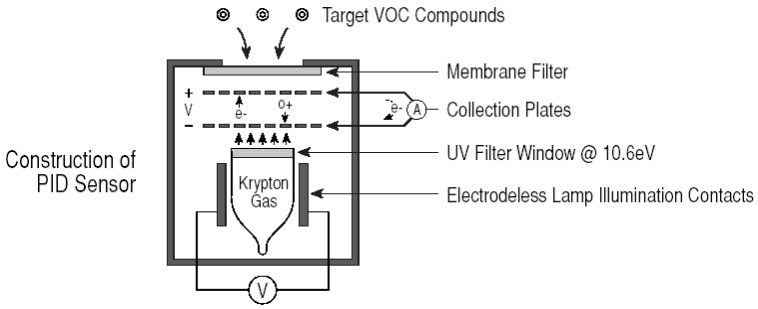

Figure 57 Typical Sensor Cell

8.1.2 Sensor Electronics Design

Intelligent Transmitter Module

The PI-700 Intelligent Transmitter Module (ITM) is a fully encapsulated microprocessor-based package that is universal in design and will accept any Detcon intelligent plug-in PID gas sensor. The ITM design uses an internal intrinsically safe barrier circuit that lifts the requirement for use of flame arrestors to achieve Class I, Division 1 (Zone1) area classification. This facilitates fast response times and improved calibration repeatability on strongly absorbing gas types. The ITM circuit functions include extensive I/O circuit protection, on-board power supplies, internal intrinsically safe barrier circuit, microprocessor, LED display, magnetic programming switches, a linear 4-20mA DC output, and a Modbus™ RS-485 output. Magnetic program switches located on either side of the LED Display are activated via a hand-held magnetic programming tool, thus allowing non-intrusive operator interface with the ITM. Calibration can be accomplished without declassifying the area. Electrical classifications are Class I, Division 1, Groups B C D and ATEX Approved for II 2G Ex db ib IIB+H_2 Gb area classifications.

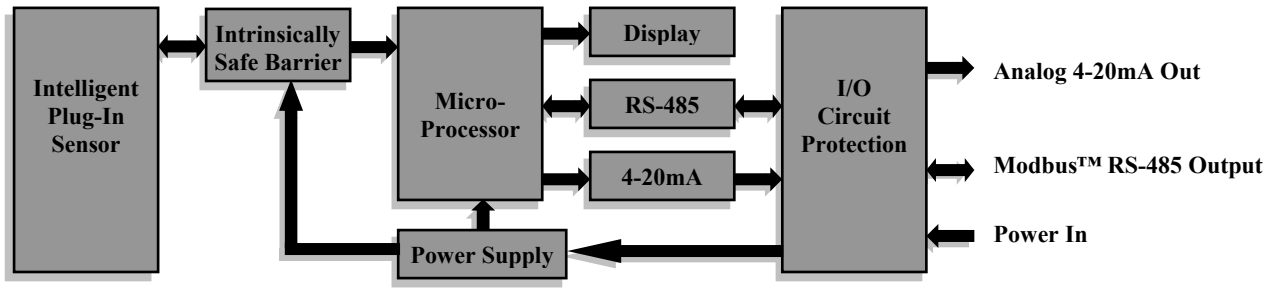

Figure 58 ITM Circuit Functional Block Diagram

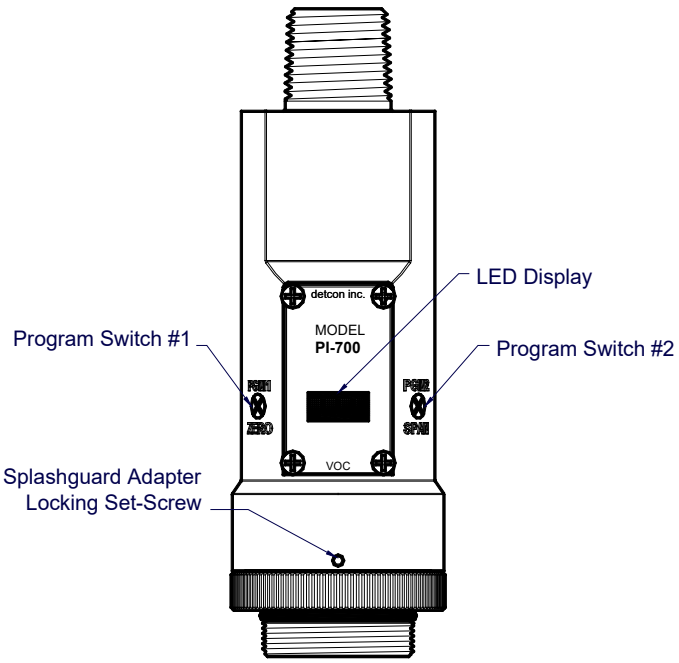

Figure 59 Sensor Assembly Front View

8.1.3 Modular Mechanical Design

The Model PI-700 Sensor Assembly is completely modular and is made up of four parts (See Figure 60 for Assembly Break-away):

17) PI-700 Intelligent Transmitter Module (ITM)
18) Intelligent Plug-in Sensor (varies by range)
19) PI-700 Splash Guard Adapter with Integral Filter
20) Splash Guard.

NOTE: All metal components are constructed from electro polished 316 Stainless Steel in order to maximize corrosion resistance in harsh environments.

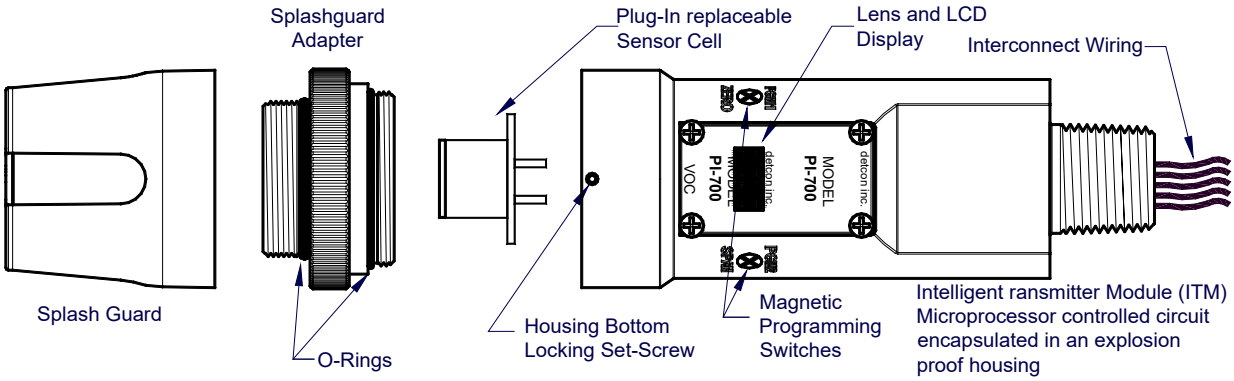

Figure 60 Sensor Assembly Breakaway

8.1.4 Intelligent Plug-in PID Gas Sensor

The Detcon range of PID gas sensors are field proven, intelligent plug-in sensors (one type is used for ranges of 20ppm and less, another is used for ranges greater than 20ppm.) The Sensors employ 100% encapsulated circuitry and over-sized gold-plated connections that eliminate corrosion problems. The intelligent design provides automatic recognition of gas type, units, full-scale range, and calibrations data when a new sensor is plugged in. The sensor can be accessed and replaced in the field very easily by releasing the locking setscrew and unthreading the Splashguard Adapter. The PID Sensor cell can be disassembled so that the lamp used can be cleaned or replaced. Detcon's ranges of PID sensors has a long shelf life and are supported by an industry-leading warranty.

Figure 61 Intelligent Plug-in Sensor

8.2 Installation

8.2.1 ATEX Operational Guidelines for Safe Use

10. Proper precautions should be taken during installation and maintenance to avoid the build-up of static charge on the plastic components of the sensor. This includes the splashguard.

11. Do not substitute components that are not authorized by the scope of the safety approval. This may impair the intrinsic safety rating.

12. Do not operate the sensor outside of the stated operating temperature limits.

13. Do not operate the sensor outside the stated operating limits for voltage supply.

14. The sensor power supply common (black wire) must be referenced to the metal enclosure body (ground) during installation.

15. These sensors have a maximum safe location voltage of Um=30V.

16. These sensors pass dielectric strength of 500VRMS between circuit and enclosure for a minimum of 1 minute at a maximum test current of 5mA.

8.2.2 Sensor Placement

Selection of sensor location is critical to the overall safe performance of the product. Six factors play an important role in selection of sensor locations:

(1) Density of the gas to be detected

(2) Most probable leak sources within the industrial process

(3) Ventilation or prevailing wind conditions

(4) Personnel exposure

(5) Maintenance access

(6) Additional placement considerations

Density
Placement of sensors relative to the density of the target gas is such that sensors for the detection of heavier than air gasses should be located within 4 feet of grade as these heavy gasses will tend to settle in low lying areas. For gasses lighter than air, sensor placement should be 4-8 feet above grade in open areas or in pitched areas of enclosed spaces.

Leak Sources
The most probable leak sources within an industrial process include flanges, valves, and tubing connections of the sealed type where seals may either fail or wear. Other leak sources are best determined by facility engineers with experience in similar processes.

Ventilation
Normal ventilation or prevailing wind conditions can dictate efficient location of gas sensors in a manner where the migration of gas clouds is quickly detected.

Personnel Exposure
The undetected migration of gas clouds should not be allowed to approach concentrated personnel areas such as control rooms, maintenance or warehouse buildings. A more general and applicable thought toward selecting sensor location is combining leak source and perimeter protection in the best possible configuration.

Maintenance Access
Consideration should be given to providing easy access for maintenance personnel. Consideration should also be given to the consequences of close proximity to contaminants that may foul the sensor prematurely.

NOTE: All installations of the gas sensor should point straight down (refer to Figure 63). Improper sensor orientation may result in false readings and permanent sensor damage.

Additional Placement Considerations
The sensor should not be positioned where it may be sprayed or coated with surface contaminating substances. Painting sensor assemblies is prohibited.

Although the sensor is designed to be RFI resistant, it should not be mounted in close proximity to high-powered radio transmitters or similar RFI generating equipment.

Mount in an area void of high wind, accumulating dust, rain or splashing from hose spray, direct steam releases, and continuous vibration. If the sensor cannot be mounted away from these conditions then make sure the Detcon Harsh Environment Splashguard accessory is used.

Do not mount in locations where temperatures will exceed the operating temperature limits of the sensor. Where direct sunlight leads to exceeding the high temperature-operating limit, use a sunshade to help reduce temperature.

8.2.3 Sensor Contaminants and Interference

PID VOC and toxic gas sensors will respond to any gas with an ionization potential <10.6eV. This is not a selective measurement technique, and hence can be used to measure a wide range of gases.

Some of the most commonly present gasses that potentially cause PID interference are listed in Table 14 (refer to Section 8.9.). The presence of cross-interference gases in an area does not preclude the use of this sensor technology, although it is likely that the sensor will experience false high readings should exposure occur.

Some heavy organic molecules may be polymerized onto, or strongly adhere to, the optical filter of the lamp. When this occurs, the lamp will require cleaning or replacement.

Relative Response Gas Matrix

Table 14 shows the response of the PID sensor to a long list of components. It includes the compound name, synonyms/abbreviations, and chemical formula. It also lists the 10.6eV Response Factor (the measure of how strong the signal from the sensor is in reference to Isobutylene gas). Isobutylene gas is the standard reference used with PID sensors, the lower the Response Factor, the stronger the signal.

8.2.4 Mounting Installation

The PI-700 sensor assembly is designed to be threaded into a ¾" Female NPT fitting of a standard cast metal, Explosion-Proof Enclosure or Junction Box. Two wrench flats on the upper section of the sensor should be used to thread the sensor into a ¾" female NPT receiving connection. Thread the sensor up until tight (5 turns is typically expected) and until the display is pointed in the direction that sensor will normally be viewed and accessed.

The PI-700 should be vertically oriented so that the sensor points straight down. The explosion-proof enclosure or junction box would then typically be mounted on a wall or pole. Detcon provides a standard selection of junction boxes available as sensor accessories (See Figure 62 below). Any appropriately rated enclosure with a downward facing ¾" NPT female connection will suffice.

When mounting on a wall, it is recommended to use a 0.25"-0.5" spacer underneath the mounting ears of the Detcon standard J-Box to offset the sensor assembly from the wall and create open access around the sensor assembly. Spacing requirements for other junction boxes may vary.

When mounting on a pole, secure the Junction Box to a suitable mounting plate and attach the mounting plate to the pole using U-Bolts. (Pole-Mounting brackets for Detcon J-box accessories are available separately.)

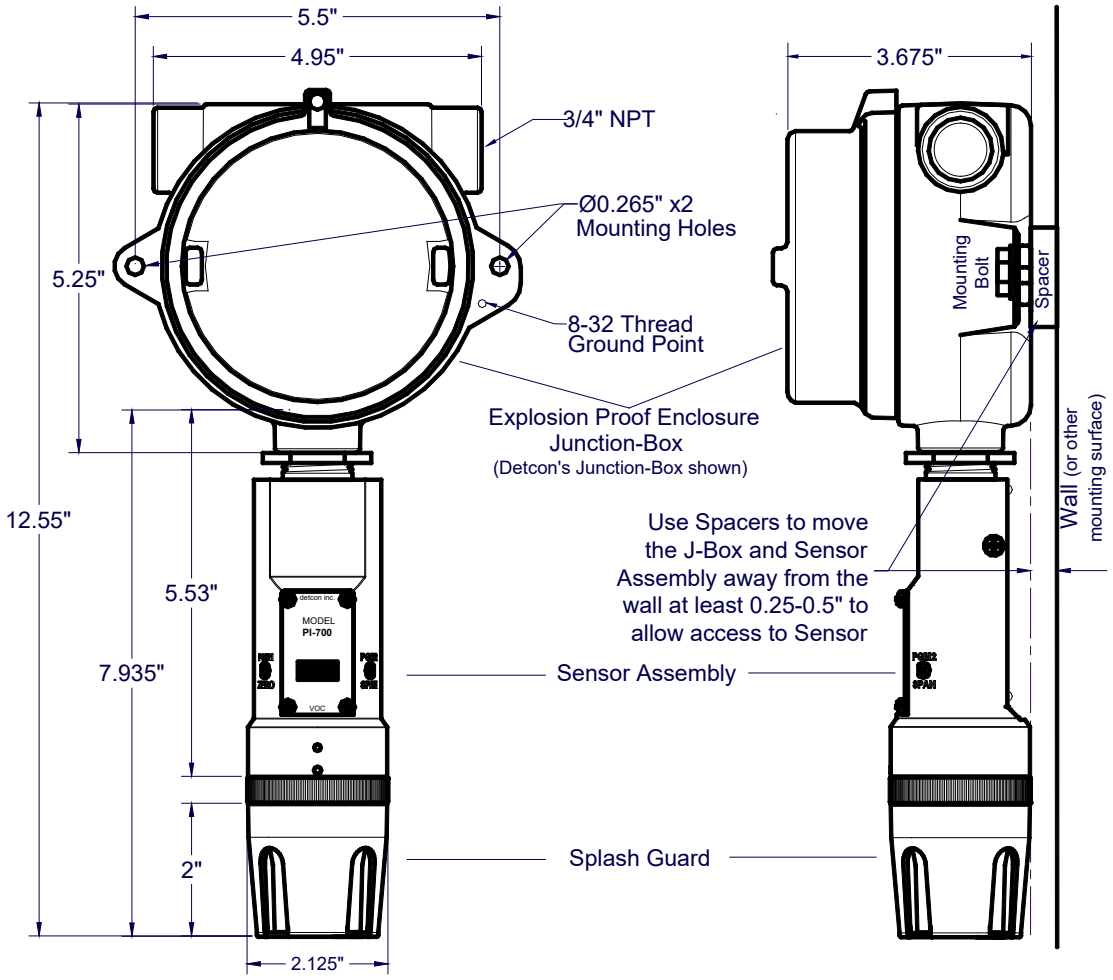

Figure 62 Outline and Mounting Dimensions

8.2.5 Electrical Installation

The Sensor Assembly should be installed in accordance with local electrical codes. The sensor assemblies are designed for Class I, Division 1, Groups B, C, & D area classifications, and for ATEX II G Ex db ib IIB+H_2 Gb area classifications.

Proper electrical installation of the gas sensor is critical for conformance to Electrical Codes and to avoid damage due to water leakage. Refer to Figure 63 and Figure 64 for proper electrical installation.

NOTE: If a conduit run exits the secondary port, repeat the installation technique shown in Figure 63.

In Figure 63, the drain allows water condensation inside the conduit run to safely drain away from the sensor assembly. The electrical seal fitting is required to meet the National Electrical Code per NEC Article 500-3d (or Canadian Electrical Code Handbook Part 1 Section 18-154). Requirements for locations of electrical seals are covered under NEC Article 501-5. Electrical seals also act as a secondary seal to prevent water from entering the wiring terminal enclosure. However, they are not designed to provide an absolute water-tight seal, especially when used in the vertical orientation.

NOTE: A conduit seal is required to be located within 18" of the Stainless Steel J-Box and Sensor Assembly or at the conduit entry of the Aluminum J-Box and Sensor Assembly for North American installations. Crouse Hinds type EYS2, EYD2 or equivalent are suitable for this purpose.

NOTE: The Detcon Warranty does not cover water damage resulting from water leaking into the enclosure. Since the electronics are 100% epoxy encapsulated, only the wire terminations can get wet. This could cause abnormal operation and possibly cause corrosion to the terminal connections. However, it would not be expected to cause permanent damage to the sensor.

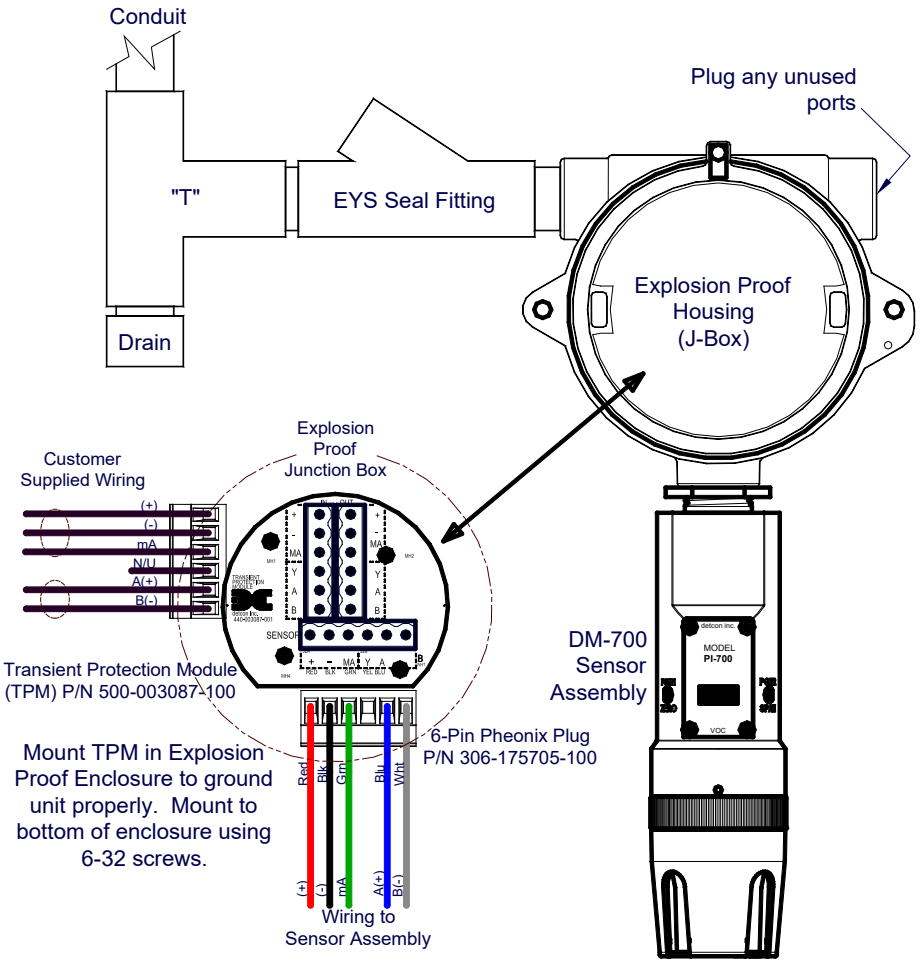

Figure 63 Typical Installation

NOTE: Any unused ports shall be blocked with suitable ¾" male NPT plugs. Detcon supplies one ¾" NPT male plug with their accessory J-box enclosures (Detcon P/N 8522-750). If connections are other than ¾" NPT, use an appropriate male plug of like construction material.

NOTE: All devices connecting to the ¾" NPT conduit entries should be tightened to a minimum of 16 foot-pounds torque.

NOTE: The flamepath joints are not intended to be repaired if damaged.

NOTE: For ATEX use, cable glands, adapters, and/or blanking elements shall be ATEX certified to Ex d IIC and shall be installed.

WARNING: Cables and cable glands must be rated for ≥90°C.

NOTE: Connect earth wire to crimped terminal (≥4mm^2) (Internal and external ground points).

8.2.6 Field Wiring

Detcon Model PI-700 toxic gas sensors assemblies require three conductor connections between power supplies and host electronic controller's 4-20mA output, and two conductor connections for the Modbus™ RS-485 serial interface. Wiring designations are + (DC), – (DC), mA (sensor signal), and Modbus™ RS-485 A (+), and B (-). Maximum wire length between sensor and 24VDC source is shown in the Table 9 below. Maximum wire size for termination in the Detcon J-Box accessory is 14 gauge.

Table 19 Wire Gauge vs. Distance

AWG	WIRE DIA.	METERS	Feet	Over-Current Protection
22	0.723mm	700	2080	3A
20	0.812mm	1120	3350	5A
18	**1.024MM**	1750	5250	7A
16	1.291mm	2800	8400	10A
14	1.628mm	4480	13,440	20A

NOTE 1: Wiring table is based on stranded tinned copper wire and is designed to serve as a reference only.

NOTE 2: SHIELDED CABLE IS REQUIRED FOR INSTALLATIONS WHERE CABLE TRAYS OR CONDUIT RUNS INCLUDE HIGH VOLTAGE LINES OR OTHER POSSIBLE SOURCES OF INDUCED INTERFERENCE. SEPARATE CONDUIT RUNS ARE HIGHLY RECOMMENDED IN THESE CASES.

NOTE 3: The supply of power should be from an isolated source with over-current protection as stipulated in table.

Terminal Connections

CAUTION: Do not apply System power to the sensor until all wiring is properly terminated. Refer to Section 8.2.7

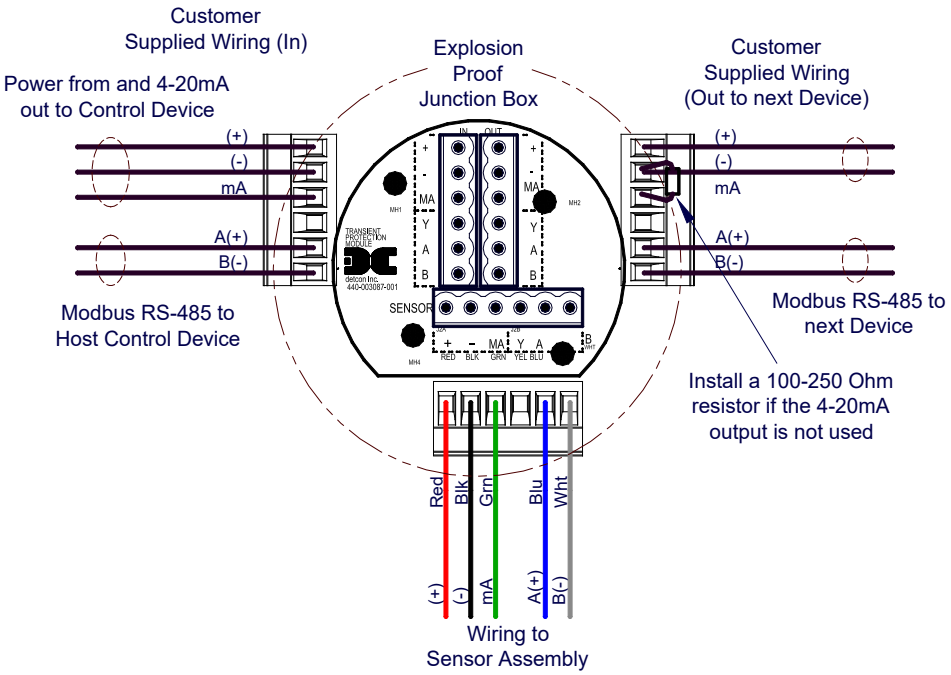

Figure 64 Sensor Wire Connections

a) Remove the junction box cover. Identify the terminal blocks for customer wire connections.

b) Observing correct polarity, terminate the 3-conductor 4-20mA field wiring (+, -, mA) to the sensor assembly wiring in accordance with the detail shown in Figure 64. If the 4-20mA output is not used, install a 100-250Ω resistor between the mA and (-) terminals on the Transient Protection Module.

NOTE: If the 4-20mA output is not being used, a 100-250Ω resistor ***must*** be installed between the mA and (-) terminals on the Transient Protection Module to ensure RS-485 communication is not disrupted by a 4-20mA Fault.

c) If applicable, terminate the RS-485 serial wiring as shown in Figure 64. Use the second plug (Out) as termination point on the customer side to facilitate a continuous RS-485 serial loop

The RS-485 (if applicable) requires 24 gauge, two conductor, shielded, twisted pair cable between the sensor and host. General Cable Commodore part number ZO16P0022189 is recommended.

NOTE: Install a 120-ohm resistor across A & B terminals on the last sensor in the serial loop.

d) Trim all exposed wire leads if they are not permanently landed in the terminal block.

e) Replace the junction box cover.

8.2.7 Initial Start Up

Upon completion of all mechanical mounting and termination of all field wiring, apply system power in the range of 11.5-30VDC (24VDC typical) and observe the following normal conditions:

a) PI-700 display reads close to "0", and no fault messages are flashing.

b) A temporary upscale or downscale reading may occur as the sensor stabilizes. This upscale reading will typically decrease to near "0"ppm within 1-2 minutes of power-up, assuming there is no gas in the area of the sensor. In some extreme cases, the sensor may require up to 5 minutes before the lamp ignites and becomes operational.

NOTE: The 4-20mA signal is held constant at 4mA for the first two minutes after power up.

Initial Operational Tests

After a warm up period of 1 hour (or when zero has stabilized), the sensor should be checked to verify sensitivity to the specific target gas of the application (not just Isobutylene span gas).

NOTE: A secondary filter accessory, built into the splashguard adapter, is used with the Model 700 PID sensors (Figure 69). This multi-stage filter is designed to prevent heavy and complex airborne VOC molecules from contacting the PID sensor and causing surface contamination and subsequent reading drift. When used effectively, it may extend the time between required sensor cleaning and / or sensor replacement. Its use is limited to application cases where the target gas(s) are moderate to small VOC molecules (i.e. benzene and smaller molecular weights). Before installing, it must be verified that the filter does not inhibit response to the target gas being monitored. Do not use this filter if the target gas response is inhibited. The service life of the filter may vary depending on the application; however, it is advised to change it out at least on a 18-24 month cycle.

Material Requirements

- Detcon PN 613-120000-700 700 Series Splash Guard with integral Cal Port -OR-
- Detcon PN 943-000006-132 Threaded Calibration Adapter
- Detcon Span Gas (See Detcon for Ordering Information). Recommended span gas is 50% of range with Isobutylene in air or N_2 balance.
- Detcon P/N 985-241100-321 In-Line Humidifying Tube 24"

a) Attach the calibration adapter to the threaded sensor housing or connect tubing to integral cal port. Apply the test gas at a controlled flow rate of 200 - 500cc/min using the in-line humidifying tube, (200cc/min is the recommended flow). Observe that the ITM display increases to a level near that of the applied calibration gas value.

b) Remove test gas and observe that the ITM display decreases to "0".

Initial operational tests are complete. PI-700 VOC gas sensors are factory calibrated prior to shipment, and should not require significant adjustment on start up. However, it is recommended that a complete calibration test and adjustment be performed 16 to 24 hours after power-up. Refer to zero and span calibration instructions in Section 8.3.4.

8.3 Operation

8.3.1 Programming Magnet Operating Instructions

The Operator Interface of the Model 700 Series gas sensors is accomplished via two internal magnetic switches located to either side of the LED display (see Figure 66). The two switches, labeled “PGM1” and “PGM2”, allow for complete calibration and configuration, thereby eliminating the need for area de-classification or the use of hot permits.

Figure 65 Magnetic Programming Tool

The magnetic programming tool (Figure 65) is used to operate the magnetic switches. Switch action is defined as momentary contact, 3-second hold, and 10-second hold. (Hold times are defined as the time from the point when the arrow-prompt “➔ “appears.) For momentary contact use, the programming magnet is briefly held over a switch location. For 3-second hold, the programming magnet is held in place over the switch location for three seconds. For 10-second hold, the programming magnet is held in place over the switch location for 10 seconds. The 3 and 10 second holds are generally used to enter calibration/program menus and save new data. The momentary contact is generally used to move between menu items and to modify set-point values. Arrows (“➔” and “➔”) are used on the LED display to indicate when the magnetic switches are activated. The location of “PGM1” and “PGM2” are shown in Figure 66.

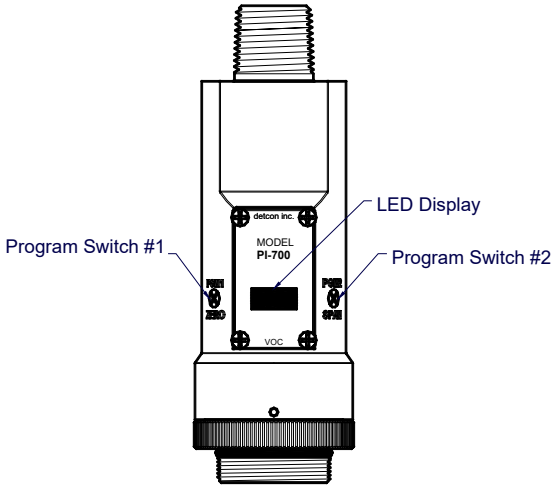

Figure 66 Magnetic Programming Switches

NOTE: While in the Program Mode, if there is no magnetic switch interaction after 4 consecutive menu scrolls, the sensor will automatically revert to normal operating condition. While changing values inside menu items, **if there is no magnet activity after 3-4 seconds the sensor will revert to the menu scroll.**
(Exception to this is with “Signal Output Check” mode.)

8.3.2 Operator Interface

The operating interface is menu-driven via the two magnetic program switches located under the target marks of the sensor housing. The two switches are referred to as “PGM1” and “PGM2”. The menu list consists of three major items that include sub-menus as indicated below. (Refer to the complete Software Flow Chart.)

Normal Operation

Current Reading and Gas Type/Fault Status

Calibration Mode

AutoZero
AutoSpan

Program Mode

View Sensor Status
- Sensor Model Type
- Current Software Version
- Gas Type
- Range of Detection
- Serial ID address
- AutoSpan Level
- Days Since Last AutoSpan
- Remaining Sensor Life
- Gas Factor
- Zero Offset
- mA Output
- Input Voltage Supply
- Sensor Temperature
- Gain Setting
- Raw Counts

Set AutoSpan Level
Set Serial ID
Set Range
Set Gas Factor
Set Zero Offset
Signal Output Check
Restore Default Settings

Software Flowchart

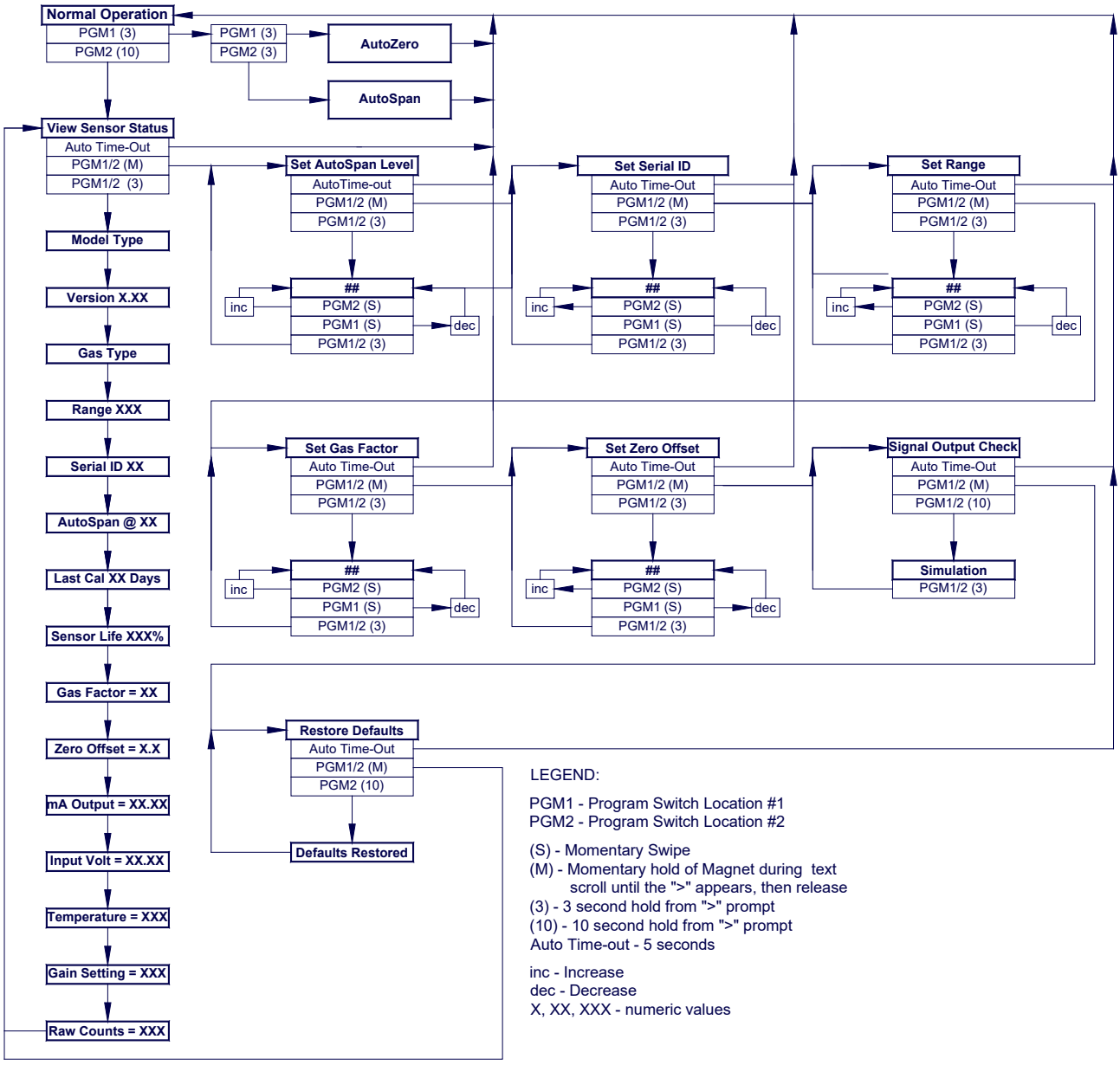

Figure 67 PI-700 Software Flowchart

8.3.3 Normal Operation

In normal operation, the ITM Display continuously shows the current sensor reading, which will normally appear as “0”. Once every 60 seconds the LED display will flash the sensor’s measurement units and gas type (i.e. ppm VOC). If the sensor is actively experiencing any diagnostic faults, a “Fault Detected” message will scroll across the display on the ITM display once every minute instead of the units of measure and the gas type. At any time, while the sensor is in “Fault Detected” mode, PGM1 or PGM2 can be swiped to prompt the sensor to display a list of the active faults. In normal operation, the 4-20mA current output linearity corresponds with the full-scale range. The RS-485 Modbus™ serial output provides the current gas reading and complete fault status on a continuous basis when polled by the master device.

8.3.4 Calibration Mode

8.3.4.1 AutoZero

The AutoZero function is used to zero the sensor. Local ambient air can be used to zero calibrate a VOC gas sensor as long as it can be confirmed that it contains no target or interference gasses. If this cannot be confirmed then a zero air or N_2 cylinder should be used.

Material Requirements:

- Detcon PN 327-000000-000 MicroSafe™ Programming Magnet
- Detcon PN 613-120000-700 700 Series Splash Guard with integral Cal Port and Calibration Wind Guard (P/N 943-000000-000) -OR-
- Detcon PN 943-000006-132 Threaded Calibration Adapter
- Detcon PN 942-001123-000 Zero Air cal gas (or use ambient air if no target gas is present).
- Detcon P/N 942-640023-100 Nitrogen 99.99%
- Detcon P/N 985-241100-321 In-Line Humidifying Tube 24"

NOTE: The Calibration Wind Guard must be used when the Splashguard Adapter with integral Cal Port is used. Failure to use the Calibration Wind Guard may result in an inaccurate AutoZero calibration.

a) For VOC sensors, if the ambient air is known to contain no target gas content, then it can be used for zero calibration. If a zero gas or N_2 cal cylinder is going to be used, be sure to use in-line humidifying tube to present cal gas with correct ambient humidity level. Attach the calibration adapter and set flow rate of 200-500cc/min and let sensor purge for 1-2 minutes before executing the AutoZero.

b) From Normal Operation, enter Calibration Mode by holding the programming magnet over PGM1 for 3 seconds. Note, the "◄" prompt will show that the magnetic switch is activated during the 3 second hold period. The display will then scroll "**PGM1=AutoZero …PGM2=AutoSpan**". Hold the programming magnet over PGM1 for 3 seconds once the "►" prompt appears to execute AutoZero (or allow to timeout in 5 seconds if AutoZero is not desired).

NOTE: Upon entering Calibration Mode, the 4-20mA signal drops to 2mA and is held at this level until the program returns to normal operation. Modbus™ Status Register bit 14 is also set to signify when the sensor is in-calibration mode.

c) The ITM will display the following sequence of text messages as it proceeds through the AutoZero sequence:

Zero Cal . . . Setting Zero . . . Zero Saved

d) Remove the zero gas and calibration adapter, if applicable.

8.3.4.2 AutoSpan

The AutoSpan function is used to span calibrate the sensor. Unless otherwise specified, span adjustment is recommended at 50% of range. This function is called "AUTO SPAN".

NOTE: Before performing AutoSpan Calibration, verify that the AutoSpan level matches the span calibration gas concentration as described in Section 8.3.5.2.

Material Requirements:

- Detcon PN 327-000000-000 MicroSafe™ Programming Magnet
- Detcon PN 613-120000-700 700 Series Splash Guard with integral Cal Port and Calibration Wind Guard (P/N 943-000000-000) - OR -
- Detcon PN 943-000006-132 Threaded Calibration Adapter
- Target Span Gas (See Detcon for Ordering Information) representing the target gas (with air or N_2 balance) between 10% and 90% of the full-scale range - OR -
- Isobutylene Span Gas. Recommended span gas is 50% of range with Isobutylene in air or N_2 balance
- Detcon P/N 985-241100-321 In-Line Humidifying Tube 24"

NOTE 1: Contact Detcon for Ordering Information on Span Gas cylinders.

NOTE 2: For span, an Isobutylene gas concentration of 50% of range is normally recommended (see Note 4). This should be supplied at a controlled flow rate of 500cc/min using the in-line humidifying tube. Other concentrations can be used if they fall within allowable levels of 5% to 100% of range.

NOTE 3: If Isobutylene is used as span gas, the correct Gas Factor must be used.

NOTE 4: It is strongly recommended to use the target VOC gas to calibrate for span. This eliminates any possibility that Isobutylene cross-calibration is not accurate. Cross-calibration by use of other gasses should be confirmed by Detcon or at a minimum executed relative to the information provided in Table 23.

NOTE 5: The Calibration Wind Guard must be used when the Splashguard Adapter with integral Cal Port is used. Failure to use the Calibration Wind Guard may result in an inaccurate AutoSpan calibration.

CAUTION: Verification that the calibration gas level setting matches the calibration span gas concentration is required before executing "AutoSpan" calibration. These two numbers must be equal.

AutoSpan consists of entering Calibration Mode and following the menu-displayed instructions. The display will ask for the application of span gas in a specific concentration. The applied gas concentration must be equal to the calibration gas level setting. The factory default setting and recommendation for span gas concentration is 50% of range. If a span gas containing the recommended concentration is not available, other concentrations may be used as long as they fall between 5% and 100% of range. However, any alternate span gas concentration value must be programmed via the "**Set AutoSpan Level**" menu before proceeding with AutoSpan calibration. Follow the instructions "a" through "e" below for AutoSpan calibration.

a) Verify that the AutoSpan Level is equal to the Calibration Span Gas Concentration. (Refer to View Sensor Status in Section 8.3.5.1.) If the AutoSpan Level is not equal to the Calibration span gas concentration, adjust the AutoSpan Level as instructed in Section 8.3.5.2.

b) From Normal Operation, enter Calibration Mode by holding the programming magnet over PGM1 for 3 seconds. Note, the "🡄" prompt will show that the magnetic switch is activated during the 3 second hold period. The display will then scroll "**PGM1=AutoZero . . . PGM2=AutoSpan**". Hold the programming magnet over PGM2 for 3 seconds to execute AutoSpan (or allow to timeout in 5 seconds if AutoSpan is not intended). The ITM will then scroll "**Apply XX ppm Gas**".

NOTE: Upon entering Calibration Mode, the 4-20mA signal drops to 2mA and is held at this level until the program returns to normal operation. Modbus™ Status Register bit 14 is also set to signify when the sensor is in-calibration mode.

c) Apply the span calibration test gas for VOC gas sensors at a flow rate of 200-500cc/min using the in-line humidifying tube (200cc/min is recommended). As the sensor signal begins to increase the display will switch to flashing "XX"reading as the ITM shows the sensor's "as found" response to the span gas presented. If it fails to meet the minimum in-range signal change criteria within 2½ minutes, the display will report "**Range Fault**" twice and the ITM will return to normal operation, aborting the AutoSpan sequence. The ITM will continue to report a "Range Fault" and will not clear the fault until a successful AutoSpan is completed.

Assuming acceptable sensor signal change, after 1 minute the reading will auto-adjust to the programmed AutoSpan level. During the next 30 seconds, the AutoSpan sequence checks the sensor for acceptable reading stability. If the sensor fails the stability check, the reading is re-adjusted back to the AutoSpan level and the cycle repeats until the stability check is passed. Up to three additional 30-second stability check periods are allowed before the unit reports a "**Stability Fault**" twice and the ITM will return to normal operation, aborting the AutoSpan sequence. The ITM will continue to report a "**Stability Faul**t" and will not clear the fault until a successful AutoSpan is completed.

If the sensor passes the stability check, the ITM reports a series of messages:

"**Span OK"**

"**Sensor Life XXX%**"
"**Remove Span Gas**"

d) Remove the span gas source and calibration adapter. The ITM will report a live reading as it clears toward "0". When the reading clears below 10% of range, the ITM will display "**Span Complete**" and will revert to normal operation. If the sensor fails to clear to less than 10% in less than 5 minutes, a "**Clearing Fault**" will be reported twice and the ITM will return to normal operation, aborting the AutoSpan sequence. The ITM will continue to report a "**Clearing Fault**" and will not clear the fault until a successful AutoSpan is completed.

NOTE: When calibrating sensors where there are high levels of VOC gases in the ambient background, use Zero Air or N_2 to assist clearing to <10% of range.

e) The AutoSpan calibration is complete.

NOTE 1: Upon entering the calibration menu, the 4-20mA signal drops to 2mA and is held at this level until the program returns to normal operation.

NOTE 2: If the sensor fails the minimum signal change criteria, a **"Range Fault"** will be declared and a "**Fault Detected**" message will be displayed alternately with the sensor's current reading. The 4-20mA output will be taken to 0mA and the 'Range Fault' fault bit will be set on the Modbus™ output.

NOTE 3: If the sensor fails the stability criteria, a **"Stability Fault"** will be declared and a "**Fault Detected**" message will be displayed alternately with the sensor's current reading. The 4-20mA output will be taken to 0mA and the 'Stability Fault' fault bit will be set on the Modbus™ output.

NOTE 4: If the sensor fails the clearing time criteria, a "**Clearing Fault**" will be declared and a **"Fault Detected**" message will be displayed alternately with the sensor's current reading. The 4-20mA output will be taken to 0mA and the 'Clearing Fault' fault bit will be set on the Modbus™ output.

8.3.5 Program Mode

Program Mode provides a "**View Sensor Status**" menu to check operational and configuration parameters. Program Mode provides for adjustment of the AutoSpan Level, Serial ID, Set Range, Set Gas Factor, and Set Zero Offset. Additionally, Program Mode includes the diagnostic function "Signal Output Check" and "Restore Factory Defaults".

The Program Mode menu items appear in the order presented below:

View Sensor Status
Set AutoSpan Level
Set Serial ID
Set Range
Set Gas Factor
Set Zero Offset
Signal Output Check
Restore Default Settings

Navigating Program Mode

From Normal Operation, enter Program Mode by holding the magnet over PGM2 for 10 seconds. Note, the "◄" prompt will show that the magnetic switch is activated during the 10 second hold period. The ITM will enter Program Mode and the display will display the first menu item "View Sensor Status". To advance to the next menu item, hold the magnet over PGM1 or PGM2 while the current menu item's text is scrolling. At the conclusion of the text scroll the arrow prompt ("◄" for PGM2 or "►" for PGM1) will appear, immediately remove the magnet. The ITM will advance to the next menu item. Repeat this process until the desired menu item is displayed. Note, PGM1 moves the menu items from right to left and PGM2 moves the menu items from left to right.

To enter a menu item, hold the magnet over PGM1 or PGM2 while the menu item is scrolling. At the conclusion of the text scroll the "◄"prompt ("◄" for PGM2 or "►" for PGM1) will appear, continue to hold the magnet over PGM1 or PGM2 for an additional 3-4 seconds to enter the selected menu item. If there is no magnet activity while the menu item text is scrolling (typically 4 repeated text scrolls), the ITM will automatically revert to Normal Operation.

8.3.5.1 View Sensor Status

View Sensor Status displays all current configuration and operational parameters including: sensor type, software version number, gas type, detection range, AutoSpan level, days since last AutoSpan, estimated remaining sensor life, gas factor, zero offset, mA output, input voltage, sensor ambient temperature, gain setting, and the sensor's raw counts.

From the **View Sensor Status** text scroll, hold the magnet over PGM1 or PGM2 until the "◀" prompt appears and continue to hold the magnet in place for an additional 3-4 seconds (until the display starts to scroll "Status Is"). The display will scroll the complete list of sensor status parameters sequentially:

Sensor Model Type
The menu item appears as: "Model PI-700"

Current Software Version
The menu item appears as: "Version 1.XX"

Gas Type
The menu item appears as: " Gas Type = VOC"

Range of Detection.
The menu item appears as: "Range XXX"

Serial ID address.
The menu item appears as: "Serial ID XX"

AutoSpan Level.
The menu item appears as: "AutoSpan Level XX"

Days Since Last AutoSpan.
The menu items appears as: "Last Cal XX days"

Remaining Sensor Life.
The menu item appears as: "Sensor Life 100%"

Gas Factor
The menu item appears as: "Gas Factor X.X"

Zero Offset
The menu item appears as: "Zero Offset X.X"

mA Output
The menu item appears as: "mA Output XX.XX"

Input Voltage Supply

The menu item appears as: “Voltage XX.X VDC”

Sensor Temperature

The menu item appears as: “Temp XX C”

Gain Setting

The menu item appears as: “Gain XX”

Raw Counts

The menu item appears as: “Counts XXXX”

When the status list sequence is complete, the ITM will revert to the “View Sensor Status” text scroll. The user can either: 1) review list again by executing another 3-4 second hold, 2) move to another menu item by executing a momentary hold over PGM1 or PGM2, or 3) return to Normal Operation via automatic timeout of about 15 seconds (the display will scroll “View Sensor Status” 4 times and then return to Normal Operation).

8.3.5.2 Set AutoSpan Level

Set AutoSpan Level is used to set the span gas concentration level that is being used to calibrate the sensor. This level is adjustable from 1% to 99% of range depending on the range of the sensor (see Table 20) . The current setting can be viewed in View Program Status.

Table 20 Maximum and Minimum AutoSpan Settings

Sensor Full Scale Range	Minimum AutoSpan Level	Maximum AutoSpan Level	Adjustment Increment	Sensor Full Scale Range	Minimum AutoSpan Level	Maximum AutoSpan Level	Adjustment Increment
1.00	0.01	0.99	0.01	95	1	90	Note 1
2.00	0.01	1.99	0.01	100	1	95	Note 1
3.00	0.01	2.99	0.01	150	1	100	Note 1
4.00	0.01	3.99	0.01	200	1	150	Note 1
5.00	0.01	4.99	0.01	250	1	200	Note 1
6.00	0.01	5.99	0.01	300	1	250	Note 1
7.00	0.01	6.99	0.01	350	1	300	Note 1
8.00	0.01	7.99	0.01	400	1	350	Note 1
9.00	0.01	8.99	0.01	450	1	400	Note 1
10.0	1.0	9.9	0.1	500	1	450	Note 1
11.0	1.0	10.9	0.1	550	1	500	Note 1
12.0	1.0	11.9	0.1	600	1	550	Note 1
13.0	1.0	12.9	0.1	650	1	600	Note 1
14.0	1.0	13.9	0.1	700	1	650	Note 1
15.0	1.0	14.9	0.1	750	1	700	Note 1
16.0	1.0	15.9	0.1	800	1	750	Note 1
17.0	1.0	16.9	0.1	850	1	800	Note 1
18.0	1.0	17.9	0.1	900	1	850	Note 1
19.0	1.0	18.9	0.1	950	1	900	Note 1
20.0	1.0	19.9	0.1	1000	1	950	Note 1
21.0	1.0	20.9	0.1	1500	1	1000	Note 1
22.0	1.0	21.9	0.1	2000	1	1500	Note 1
23.0	1.0	22.9	0.1	2500	1	2000	Note 1
24.0	1.0	23.9	0.1	3000	1	2500	Note 1

25.0	1.0	24.9	0.1	3500	1	3000	Note 1
30	1	25	Note 1	4000	1	3500	Note 1
35	1	30	Note 1	4500	1	4000	Note 1
40	1	35	Note 1	5000	1	4500	Note 1
45	1	40	Note 1	5500	1	5000	Note 1
50	1	45	Note 1	6000	1	5500	Note 1
55	1	50	Note 1	6500	1	6000	Note 1
60	1	55	Note 1	7000	1	6500	Note 1
65	1	60	Note 1	7500	1	7000	Note 1
70	1	65	Note 1	8000	1	7500	Note 1
75	1	70	Note 1	8500	1	8000	Note 1
80	1	75	Note 1	9000	1	8500	Note 1
85	1	80	Note 1	9500	1	9000	Note 1
90	1	85	Note 1	10000	1	9500	Note 1

Note 1: When the AutoSpan value is between 1 and 25, the adjustment increment is 1

When the AutoSpan value is between 26 and 100, the adjustment increment is 5

When the AutoSpan value is between 101 and 1000, the adjustment increment is 50

When the AutoSpan value is between 1001 and 10000, the adjustment increment is 500

The menu item appears as: "**Set AutoSpan Level**".

From the **Set AutoSpan Level** text scroll, hold the magnet over PGM1 or PGM2 until the "◄" prompt appears and continue to hold the magnet in place for an additional 3-4 seconds (until the display starts to scroll "Set Level"). The display will switch to " XX" (where XX is the current gas level). Swipe the magnet momentarily over PGM2 to increase or PGM1 to decrease the AutoSpan Level until the correct level is displayed. When the correct level is achieved, hold the magnet over PGM1 or PGM2 for 3-4 seconds to accept the new value. The display will scroll "Level Saved", and revert to "Set AutoSpan Level" text scroll.

Move to another menu item by executing a momentary hold, or return to Normal Operation via automatic timeout of about 15 seconds (the display will scroll "Set AutoSpan Level" 4 times and then return to Normal Operation).

8.3.5.3 Set Serial ID

Detcon Model PI-700 sensors can be polled serially via RS-485 Modbus™ RTU. Refer to Section 8.4 for details on using the Modbus™ output feature.

Set Serial ID is used to set the Modbus™ serial ID address. It is adjustable from 01 to 256 in hexadecimal format (01-FF hex). The current serial ID can be viewed in View Sensor Status using the instruction given in Section 8.3.5.1.

The menu item appears as: "**Set Serial ID**".

From the "**Set Serial ID"** text scroll, hold the programming magnet over PGM1 or PGM2 until the "◀" prompt appears and continue to hold the magnet in place for an additional 3-4 seconds (until the display starts to scroll "Set ID"). The display will then switch to " XX" (where XX is the current ID address). Swipe the magnet momentarily over PGM2 to increase or PGM1 to decrease the hexadecimal number until the desired ID is displayed. Hold the magnet over PGM1 or PGM2 for 3-4 seconds to accept the new value. The display will scroll "ID Saved", and revert to "Set Serial ID" text scroll.

Move to another menu item by executing a momentary hold, or, return to Normal Operation via automatic timeout of about 15 seconds (the display will scroll "Set Serial ID" 5 times and then return to Normal Operation).

8.3.5.4 Set Range

The full-scale range of a PI-700 sensor is determined at the time of order. The Intelligent Plug-in Sensor is factory calibrated for this range. However, if the application requirements change and the user needs to alter the original range, the "Set Range" function can be used to make field adjustments.

The currently selected full-scale range is displayed in the "**View Sensor Status**" menu. The factory calibrated full-scale range is printed on the Intelligent Plug-in Sensor Label. When a new range is selected the 4-20mA and Modbus™ outputs will automatically be rescaled, and the span gas level will default to 50% of the new range.

The menu item appears as: "**Set Range**"

From the "**Set Range"** text scroll, hold the programming magnet over PGM1 or PGM2 until the "◀" prompt appears and continue to hold the magnet in place for an additional 3-4 seconds (until the display starts to scroll "Set Range"). The display will then switch to "XXX"(where XXX is the current Range). Swipe the magnet momentarily over PGM2 to increase or PGM1 to decrease the range Level until the desired range is displayed. Hold the magnet over PGM1 or PGM2 for 3 seconds to accept the new value. The display will scroll "Range Saved", and revert to "Set Range" text scroll.

Selectable ranges are:
1, 2, 3, 4, 5, 6, 7, 8, 9, 10, 15, 20 – Normal ranges for Low Range Sensors.
25, 30, 35, 40, 45, 50, 55, 60, 65, 70, 75, 80, 85, 90, 100, 150, 200, 250, 300, 350, 400, 450, 500, 600, 700, 800, 900, 1000, 2000, 3000, 4000, 5000 – Normal ranges for High Range Sensors.

The PI-700 ITM output range can be changed from the plug-in intelligent PID sensor range, but only within the following limitations: The range can be lowered by a factor of 4, or increased by a factor of 4. It is possible, but not advisable, to take a sensor outside the normal ranges for the sensor. Taking a sensor out of the normal range limits for that sensor may give unreliable, inconsistent results, and should be avoided.

Move to another menu item by executing a momentary hold, or, return to Normal Operation via automatic timeout of about 15 seconds (the display will scroll “Set Range” 4 times and then return to Normal Operation).

NOTE1: The sensor should be re-calibrated after any change is made to the sensor range. AutoSpan and AutoZero should be re-established.

NOTE2: When a new plug-in sensor is installed, the ITM will automatically default to the range of the plug-in sensor.

8.3.5.5 Set Gas Factor

All span calibrations are recommended to be done with a calibration standard consisting of Isobutylene in air background. If the target gas is not Isobutylene the correct Gas Factor will need to be set for correct operation. Refer to Table 14 for the correct Gas Factor for the target gas. The current Gas Factor is displayed in the “**View Sensor Status**” menu.

The menu item appears as: “**Set Gas Factor**”

From the **Set Gas Factor** text scroll, hold the magnet over PGM1 or PGM2 until the “◀” prompt appears and continue to hold the magnet in place for an additional 3-4 seconds (until the display starts to scroll “Set Factor”). The display will then switch to “ X.XX“ (where X.XX is the current gas factor). Swipe the magnet momentarily over PGM2 to increase or PGM1 to decrease the gas factor level until the correct value is displayed. Hold the magnet over PGM1 or PGM2 for 3 seconds to accept the new value. The display will scroll “Factor Saved”, and revert to “Set Gas Factor” text scroll.

Move to another menu item by executing a momentary hold, or, return to Normal Operation via automatic timeout of about 15 seconds (the display will scroll “Set Gas Factor” 4 times and then return to Normal Operation.

8.3.5.6 Set Zero Offset

If it is determined that there is a constant but negligible amount of residual active VOC gases in the background air, the Zero Offset feature can optionally be used to null this reading out.

To set the "**Zero Offset**" of the sensor, observe the sensor's concentration reading after a '*true*' zero air calibration procedure. This reading represents the background ambient VOC contribution to the sensors actual zero set point. Record this reading to set the Zero Offset.

The menu item appears as: "**Set Zero Offset**"

From the "**Set Zero Offset"** text scroll, hold the programming magnet over PGM1 or PGM2 until the "◀" prompt appears and then hold continue to hold the magnet in place for an additional 3-4 seconds (until the display starts to scroll "Set Zero Offset"). The display will then switch to " **X.X**" (where X.X is the current offset). Swipe the magnet momentarily over PGM2 to increase or PGM1 to decrease the number until the desired zero offset is displayed. Hold the magnet over PGM1 or PGM2 for 3-4 seconds to accept the new value. The display will scroll "ID Saved", and revert to "Set Zero Offset" text scroll.

Move to another menu item by executing a momentary hold, or, return to Normal Operation via automatic timeout of about 15 seconds (the display will scroll "Set Zero Offset" 5 times and then return to Normal Operation).

If performed correctly the sensor should read 0.0 after returning to normal operation.

8.3.5.7 Signal Output Check

Signal Output Check provides a simulated 4-20mA output and RS-485 Modbus™ output. This simulation allows the user to conveniently perform a functional system check of their entire safety system. This signal output simulation also aids the user in performing troubleshooting of signal wiring problems.

The menu item appears as: "**Signal Output Check**".

From the "**Signal Output Check**" text scroll, hold the magnet over PGM1 or PGM2 until the "◀" prompt appears and then hold continuously for an additional 10 seconds. Once initiated, the display will scroll "**Simulation Active**" until the function is stopped. During simulation mode, the 4-20mA value will be increased from 4.0mA to 20.0mA (in 1% of range increments at about a 1 second update rate) and then decreased from 20.0mA to 4.0mA. The same simulation sequence is applied to the Modbus™ output gas reading.

NOTE: Signal Output Check stays active indefinitely until the user stops the function. There is no automatic timeout for this feature.

To end simulation mode, hold magnet over PGM1 or PGM2 for 3 seconds. The display will either move to the prior menu item or move to the next menu item respectively.

Move to another menu item by executing a momentary hold, or, return to Normal Operation via automatic timeout of about 15 seconds.

8.3.5.8 Restore Factory Defaults

Restore Factory Defaults is used to clear current user configuration and calibration data from memory and revert to factory default values. This may be required if the settings have been configured improperly and a known reference point needs to be re-established to correct the problem.

This menu item appears as: "**Restore Defaults**".

NOTE: Restoring factory defaults should only be used when absolutely necessary. All previously existing configuration inputs will have to be re-entered if this function is executed. A full 10-second magnet hold on PGM 2 is required to execute this function.

From the "**Restore Defaults**" text scroll, hold the programming magnet over PGM2 until the "◀" prompt appears and continue to hold 10 seconds. The display will scroll "**Restoring Defaults**", followed by "**New ECS Connected**", and "**Range XX**" where XX is the default range of the intelligent plug-in sensor.

Move to another menu item by executing a momentary hold, or, return to Normal Operation via automatic timeout of about 15 seconds (the display will scroll “Restore Defaults” 4 times and then return to Normal Operation).

Following the execution of “**Restore Defaults**”, the PI-700 will revert to its factory default settings. The default settings are:

- Serial ID = 01. The Serial ID must be set appropriately by the operator (Section 8.3.5.3).

NOTE: The following must be performed in order before the sensor can be placed in operation.

- AutoSpan Level = 50% of range. AutoSpan level must be set appropriately by the operator (Section 8.3.5.2).
- Range: Defaults to range of intelligent plug-in sensor, must be set to the appropriate level by the operator (Section 8.3.5.4).
- AutoZero: AutoZero settings are lost and user must perform new AutoZero (Section 8.3.4.1).
- AutoSpan: AutoSpan Settings are lost and user must perform new AutoSpan (Section 8.3.4.2).

8.3.6 Program Features

Detcon PI-700 toxic gas sensors incorporate a comprehensive set of diagnostic features to achieve Fail-Safe Operation. These Operational features and Failsafe Diagnostic features are detailed below.

8.3.6.1 Operational Features

Over-Range
When gas greater than the full-scale range is detected, the ITM display will continuously flash the full-scale reading. This designates an over-range condition. The 4-20mA signal will report a 22mA output during this time.

In-Calibration Status
When the sensor is engaged in AutoZero or AutoSpan calibrations, the 4-20 mA output signal is taken to 2.0 mA and the in-calibration Modbus™ register bit is set. This alerts the user that the ITM is not in an active measurement mode. This feature also allows the user to log the AutoZero and AutoSpan events via their master control system.

Sensor Life
Sensor Life is calculated after each AutoSpan calibration and is reported as an indicator of remaining service life. It is reported in the “View Sensor Status” menu and as a RS-485 Modbus™ register bit. Sensor Life is reported on a scale of 0-100%. When Sensor Life falls below 25%, the sensor cell should be cleaned or replaced within a reasonable maintenance schedule.

Last AutoSpan Date
This reports the number of days that have elapsed since the last successful AutoSpan. This is reported in the View Sensor Status menu. After 180 days, an AutoSpan Fault will be declared.

8.3.6.2 Fault Diagnostic/Failsafe Features

Fail-Safe/Fault Supervision

Model PI-700 sensors are designed for Fail-Safe operation. If any of the diagnostic faults listed below are active, the ITM Display will scroll the message "Fault Detected" every 1 minute during normal operation. At any time during "Fault Detected" mode, holding the programming magnet over PGM1 or PGM2 for 1 second will display the active fault(s). All active faults are reported sequentially.

Most fault conditions result in failed operation of the sensor. In these cases the 4-20mA signal is dropped to the universal fault level of 0mA. These include the AutoSpan Calibration faults, Sensor Fault, Processor Fault, Memory Fault, Loop Fault, and Input Voltage Fault. The 0mA fault level is not employed for Temperature or AutoSpan Faults. For every diagnostic fault condition the associated RS-485 Modbus™ fault register will be flagged to alert the user digitally.

NOTE: Refer to the Troubleshooting Guide section for guidance on how to address fault conditions.

Range Fault – AutoSpan

If the sensor fails the minimum signal change criteria (Section 8.3.4.2) during AutoSpan sequence, the "Range Fault" will be declared. A "Range Fault" will cause a "Fault Detected" message to flash intermittently on the ITM display and drop the 4-20mA output to 0mA. The Modbus™ fault register bit for Range Fault will be set and will not clear until the fault condition has been cleared. The sensor should be considered 'Out-of-Service' until a successful AutoSpan calibration is performed.

Stability Fault - AutoSpan

If the sensor fails the signal stability criteria (Section 8.3.4.2) during AutoSpan sequence, the "Stability Fault" will be declared. A "Stability Fault" will cause a "Fault Detected" message to flash intermittently on the ITM display and drop the mA output to 0mA. The Modbus™ fault register bit for Stability Fault will be set and will not clear until the fault condition has been cleared. The sensor should be considered as 'Out-of-Service' until a successful AutoSpan calibration is performed.

Clearing Fault - AutoSpan

If the sensor fails the signal stability criteria (Section 8.3.4.2) during AutoSpan sequence, the "Clearing Fault" will be declared. A "Clearing Fault" will cause a "Fault Detected" message to flash intermittently on the ITM display and drop the mA output to 0mA. The Modbus™ fault register bit for Clearing Fault will be set and will not clear until the fault condition has been cleared. The sensor should be considered as 'Out-of-Service' until a successful AutoSpan calibration is performed.

Zero Fault

If the sensor drifts to < -10% of range, an "Under-Range Fault" will be declared. An "Under-Range Fault" will cause a "Fault Detected" message to flash intermittently on the ITM display. The Modbus™ fault register bit for Under-Range Fault will be set and will not clear until the fault condition has been cleared. If an Under-Range Fault occurs, the 4-20mA signal will be set at 0mA until the fault condition is resolved.

Sensor Fault

If the intelligent plug-in sensor is not plugged in, plugged in incorrectly, or there is a communication failure, a “Sensor Fault” is declared. A “Sensor Fault” will cause a “Fault Detected” message to flash intermittently on the ITM display. The Modbus™ fault register bit for Sensor Fault will be set and will not clear until the fault condition has been cleared. If a Sensor Fault occurs, the 4-20mA signal will be set at 0mA until the fault condition is resolved.

Processor Fault

If the detector has any unrecoverable run-time errors, a “Processor Fault” is declared. A “Processor Fault” will cause a “Fault Detected” message to flash intermittently on the ITM display. The Modbus™ fault register bit for Processor Fault will be set and will not clear until the fault condition has been cleared. If a Processor Fault occurs, the 4-20mA signal will be set at 0mA until the fault condition is resolved.

Memory Fault

If the detector has a failure in saving new data to memory, a “Memory Fault” is declared. A “Memory Fault” will cause the “Fault Detected” message to flash intermittently on the ITM display. The Modbus™ fault register bit for Memory Fault will be set and will not clear until the fault condition has been cleared. If a Memory Fault occurs, the 4-20mA signal will be set at 0mA until the fault condition is resolved.

4-20mA Loop Fault

If the sensor detects a condition where the 4-20mA output loop is not functional (high loop resistance or failed circuit function) a “4-20mA Fault” is declared. A “4-20mA Fault” will cause the “Fault Detected” message to scroll once a minute on the ITM display. The Modbus™ fault register bit for Loop Fault will be set and will not clear until the fault condition has been cleared. If a Loop Fault occurs, the 4-20mA signal will be set at 0mA until the fault condition is resolved. If the 4-20mA current loop is still out of tolerance, contact Detcon at Detcon-service@teledyne.com, or contact Detcon customer service.

Input Voltage Fault

If the detector is currently receiving an input voltage that is outside of the 11.5-28VDC range, an “Input Voltage Fault” is declared. An “Input Voltage Fault” will cause the “Fault Detected” message to flash intermittently on the ITM display. The fault register bit for Input Voltage Fault will be set and will not clear until the fault condition has been cleared. If an Input Voltage Fault occurs, the 4-20mA signal will be set at 0mA until the fault condition is resolved.

Temperature Fault

If the detector is currently reporting an ambient temperature that is outside of the –40C° to +75C° range a “Temperature Fault” is declared. A “Temperature Fault” will cause the “Fault Detected” message to flash intermittently on the ITM display. The Modbus™ fault register bit for Temperature Fault will be set and will not clear until the fault condition has been cleared. If a Temperature Fault occurs, the 4-20mA signal remains operational.

AutoSpan Fault

If 180 days has elapsed since the last successful AutoSpan, an AutoSpan Fault will be generated. An "AutoSpan Fault" will cause the "Fault Detected" message to flash intermittently on the ITM display. The Modbus™ fault register bit for AutoSpan Fault will be set and will not clear until the fault condition has been cleared by executing a successful AutoSpan. If an AutoSpan occurs, the 4-20mA signal remains operational.

8.4 RS-485 Modbus™ Protocol

Model DM-700 sensors feature Modbus™ compatible communications protocol and are addressable via the program mode. Other protocols are available. Contact the Detcon factory for specific protocol requirements. Communication is two wire, half duplex 485, 9600 baud, 8 data bits, 1 stop bit, no parity, with the sensor set up as a slave device. A master controller up to 4000 feet away can theoretically poll up to 256 different sensors. This number may not be realistic in harsh environments where noise and/or wiring conditions would make it impractical to place so many devices on the same pair of wires. If a multi-point system is being utilized, each sensor should be set for a different address. Typical address settings are: 01, 02, 03, 04, 05, 06, 07, 08, 09, 0A, 0B, 0C, 0D, 0E, 0F, 10, 11…etc.

Sensor RS-485 ID numbers are factory default to 01. These can be changed in the field via the Operator Interface described in Section 8.3.5.3.

The following section explains the details of the Modbus™ protocol that the DM-700 sensor supports.

Code 03 - Read Holding Registers is the only code supported by the transmitter. Each transmitter contains 6 holding registers which reflect its current status.

Table 21 Modbus™ Registers

FC	REG	Content Description	R/W	Content Definition		
				Value	**Meaning**	**Range**
03	40000	Device Type	R	8	700 Sensor	
03 06	40001 40001	Read Detectable Range[1,2] Write Detectable Range	R/W	100 10000	For 0-100 For 0-10000[2]	DM – 0 to 10000 FP – Read only TP – 20, 50, 100, 200 IR – 0 to 10000 PI – 0 to 10000
03	40002	Read Concentration[3,2]	R	1000	Bound by range. If > range, this value is in fault.	
03 06	40003 40003	Read AutoSpan Level[4,2] Write AutoSpan Level	R/W	50	Span gas at 50	DM – 1% to 95% of Range (40001) FP – 5% to 95% of Range (40001) TP – 2% to 50% of Range (40001) IR – 5% to 95% of Range (40001) PI – 1% to 95% of Range (40001)
03	40004	Read Sensor Life	R	85	For 85% sensor life	

FC	REG	Content Description	R/W	Content Definition		
				Value	**Meaning**	**Range**
03	40005	Read Fault Status Bits[5]	R	0x0001 0x0002 0x0004 0x0008 0x0010 0x0020 0x0040 0x0080 0x0100 0x0200 0x0400 0x0800 0x1000 0x2000 0x4000 0x8000	Global Fault Auto Span Fault Temperature Fault 4-20mA Fault Input Voltage Fault Memory Fault Processor Fault Clearing Fault Stability Fault Range Fault Sensor Fault Zero Fault Sensor Fault 2 <reserved> In Calibration Communication Error	
03	40006	Read Model #	R	1, 2, 3, 4, 5	DM, FP, IR, TP, PID respectively	
03	40007	Read Days Since Cal	R	29	29days	
03	40008	4-20 Current Output mA x100	R	400	4.00mA	**Range**
03	40009	Read Input Voltage V x100	R	2400	24.00V	
03	40010	Read Temperature	R	28	28 °C	
03/06	40011	Special #1	R/W		Function dependent on value of 40006 (See Special Register Table 22)	
03/06	40012	Special #2	R/W		Function dependent on value of 40006 (See Special Register Table 22)	
03	40013	Special #3	R		Function dependent on value of 40006 (See Special Register Table 22)	

FC	REG	Content Description	R/W	Content Definition		
				Value	Meaning	Range
03/ 06	40014	Special #4	R/W		Function defendant on value of 40006 (See Special Register Table 22)	
03	40015	Calibration Status	R	0x0000	Idle	
				0x0001	Zero Calibration Started	
				0x0002	Span Calibration Started	
				0x0003	Span Set	
				0x0004	Span Calibration Unsuccessful	
06	40015	Calibration Enable	W	0x0001	Set Zero	
				0x0002	Set Span	
				0x0008	Signal simulation mode	
				0x0009	Set FP Bridge Voltage	
				0x000A	Set TP Heater Power	
				0x000B	Set IR Gain	
03	40016	Read Text 1, first char in L	R		Two Char of Gas/Units String[6]	
03	40017	Read Text 2	R		Two Char of Gas/Units String[6]	
03	40018	Read Text 3	R		Two Char of Gas/Units String[6]	
03	40019	Read Text 4	R		Two Char of Gas/Units String[6]	
03	40020	Read Text 5, last char in H	R		Two Char of Gas/Units String[6]	
03	40021	Text null terminator in L	R		Two Char of Gas/Units String[6]	

Integer ranges from 1 all the way to 10,000.

[2] Units are determined by "units" field in the "notation" string

[3] Gas Reading times one *(x 1)* with units in notation string for "Low Range" = 0. Gas Reading times one *(x 10)* with units in notation string for "Low Range" = 1. Gas Reading times one *(x 100)* with units in notation string for "Low Range" = 2.

[4] Span Gas must be less than or equal to Detectable Range and is usually about ½ of it.

[5] Fault status bits self-reset when fault clears

[6] Text in ASCII, in order L byte, H byte, L byte… See field descriptions of notation string.

Gas/Units String

Character #	1	2	3	4	5	6	7	8	9	10	11
Description	Units			0x20	Gas Type						0x00

Units – This field is 'PPM', 'PPB', or '_ _ %' (where ' _ ' is a space, 0x20).

0x20 – The units filed is terminated with an ASCII space (0x20)

Gas Type – This field contains the gas type of the cell. Any ASCII string is permissible

0x00 – The notation string is terminated with an ASCII null character

Table 22 Modbus™ Special Registers

REG	DM (40006 = 1)		FP (40006 = 2)	IR (40006 = 3)	TP (40006 = 4)[1]	PI (40006 = 5)	
40011	Low Range= 0, 1, 2 0: Range >25 (0 decimal place) 1: Range 10-25 (1 decimal place) 2: Range <10 (2 decimal place)		Gas Factor **(R/W)** **Range = 79 to 565**	Gas Factor **(R/W)** **Range = 20 to 565**	Heater Power (mW) **(R/W)**	Low Range= 0, 1, 2 0: Range >25 1: Range 10-25 2: Range <10	
40012	0x8XXX 0x0XXX 0xX000 0xX096 0xX0C8 0xX12C	Positive Polarity Cell Negative Polarity Cell Bias = 0mV Bias = 150mV Bias = 200mV Bias = 300mV	Cal Factor **(R/W)** **Range = 79 to 565**	Active Counts	Heater Voltage (mV)	0x8XXX 0x0XXX 0xX000 0xX096 0xX0C8 0xX12C	Positive Polarity Cell Negative Polarity Cell Bias = 0mV Bias = 150mV Bias = 200mV Bias = 300mV
40013	Gain Code (integer between 0 & 15)		Bridge Current (mA)	Reference Counts	Sensor Resistance (x100 Ω)	Gain Code	
40014	Raw Counts 0-0xFFFF (0x8000 = nominal 0)		Bridge Voltage (mV) **(Read only)**	Range Divisor 1,10,100, or 1000	Heater Current (mA)	Raw Counts	

Only possible ranges are 20, 50, 100, 200. Modbus register 40001 will contain either 20, 50, 100, or 200, range divisor is not necessary.

8.5 Service and Maintenance

Calibration Frequency

In most applications, quarterly span calibration intervals will assure reliable detection. However, industrial environments differ. Upon initial installation and commissioning, close frequency tests should be performed, weekly to monthly. Test results should be recorded and reviewed to determine a suitable calibration interval. If, after 180 days, an Auto-Span Calibration is not performed, the ITM will generate an AutoSpan Fault.

8.5.1 PID Plug-In Sensor Maintenance

The plug-in PID Sensor will need to be properly maintained to achieve proper long-term performance. All PID sensors use a UV lamp that has a finite lifetime. The Detcon PID UV lamp source is expected to last at least 1 year. However, from the time of installation a gradual loss in UV lamp strength is expected (Figure 68). As the UV lamp strength decreases the sensor signal will decrease accordingly. This dictates that periodic span calibrations are required to maintain calibration accuracy. To determine the present signal strength of the PID sensor execute a valid span calibration and view the Sensor Life from the '**View Program Status**' menu. Any Sensor Life value less than 30% should result in the user's choice of replacing the plug-in sensor, cleaning the UV Lamp, or replacing the UV Lamp.

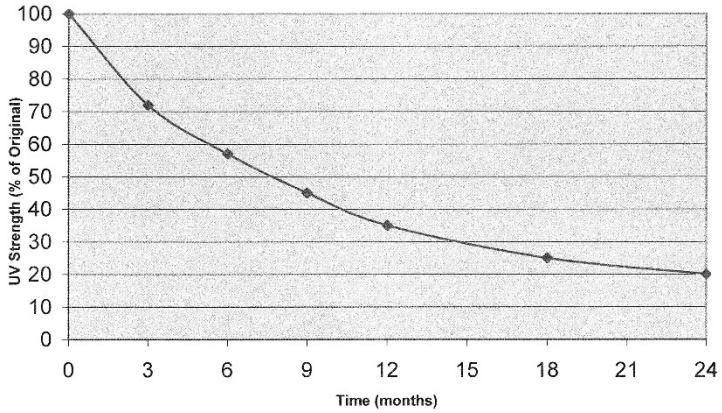

Figure 68 UV Lamp Aging Expectation

If the PID sensor appears to be losing signal strength at a rate faster than the estimates shown in Figure 68, the sensor is most likely experiencing contamination film build-up on the UV optical filter. This will happen when exposed to certain gases or ambient contaminations that collect on the surface of the UV filter. The result is a decrease in the amount of emitted UV light from the lamp source. This is known to happen with gases that can be polymerized by UV light (such as heavy complex VOC's), airborne oil vapors, and very fine dust. As UV Filter contamination occurs, the sensor's signal strength falls off in addition to the expected loss rate shown in Figure 68. This phenomenon can be reversed by disassembling the sensor and carefully cleaning the UV lamp filter using a specialized cloth.

A secondary filter accessory, built into the splashguard adapter, is used with the Model 700 PID sensors (Figure 69). This multi-stage filter is designed to prevent heavy and complex airborne VOC molecules from contacting the PID sensor and causing surface contamination and subsequent reading drift. When used effectively, it may extend the time between required sensor cleaning and / or sensor replacement. Its use is limited to application cases where the target gas(s) are moderate to small VOC molecules (i.e. benzene and smaller molecular weights). Before installing, it must be verified that the filter does not inhibit response to the target gas being monitored. Do not use this filter if the target gas response is inhibited. The service life of the filter may vary depending on the application; however, it is advised to change it out at least on a 18-24 month cycle.

In addition, a small moisture control packet (P/N 960-700PID-000) Figure 70 is banded around the plug-in PID sensor. This helps the sensor maintain better zero stability in extremely high humidity conditions. It is only to be used in conjunction with the secondary filter discussed previously. This moisture control packet should be replaced on an 18-24 month cycle.

Figure 69 Splashguard Adapter with Integral Filter

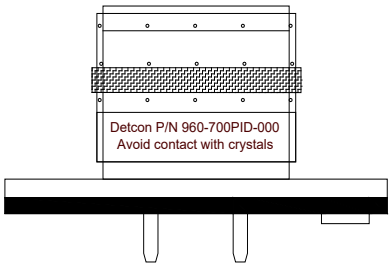

Figure 70 Plug-in sensor with Moisture control packet

It is also possible, under certain ambient contamination conditions, that the sensor's Detector Cell may have a partially conductive film that forms across the contact grids. This condition causes the zero background signal to gradually increase to the point where it becomes unacceptable for the range of signal input to the transmitter electronics. When this occurs the detector cell should be replaced. This can be checked by examining the amount of raw signal that is produced during exposure to zero gas. Refer to the '**View Program Status**' menu and record the Raw Signal report after 5 minutes of zero gas exposure. A value that exceeds 3000 counts would be evidence of this problem.

General recommendations for Sensor Maintenance

- For normal environmental exposure and signal decay, replace the plug-in sensor every 9-12 months. (especially if there are no skilled technicians to handle proper UV lamp replacement.)
- If skilled technicians are available, replace just the UV lamp every 9-12 months.
- For abnormally high rates of signal decay, clean the UV lamp monthly, using a Lamp Cleaning Kit, and replace the UV lamp every 9-12 months.
- For any proven cases where the zero baseline has drifted up, replace the detector cell.

All piD Sensor Cells contain six user replaceable components:

	Filter Cap	Spacer	
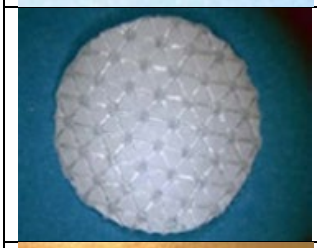	Filter Media #1	Filter Media #2	
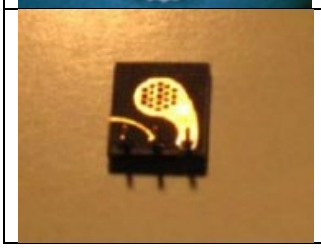	Cell Assembly	10.6eV Lamp	

Figure 71 Sensor Cell Parts

NOTE: Avoid touching lamp's window as well as any metal portion of the Detector Cell with bare fingers. It is acceptable to hold the lamp by its glass body or by the edges of the window. Fingerprints left on those parts may adversely affect the sensor's operation. Use of cotton or latex gloves is suggested.

Disassembly

1. Power down the instrument and remove the sensor cell.
2. Remove the filtercap by applying a slight upward pressure with the tip of a screwdriver or an Exacto Blade just below the hole in the cap and between the cap and the housing.

Figure 72 Removal of Filter Cap

3. With a fine tipped tweezers, remove both the Filter Media and set aside.

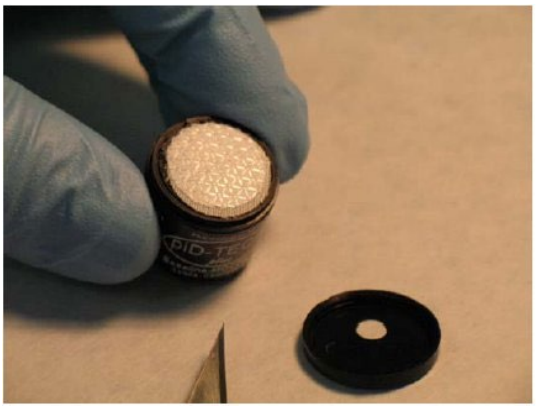

Figure 73 Removal of Filter Media

4. Using the Exacto Blade, remove the spacer and set it aside.

Figure 74 Removal of Spacer

5. With fine tipped tweezers, carefully remove the cell assembly by prying under the cell's edge where the connector pins are located.

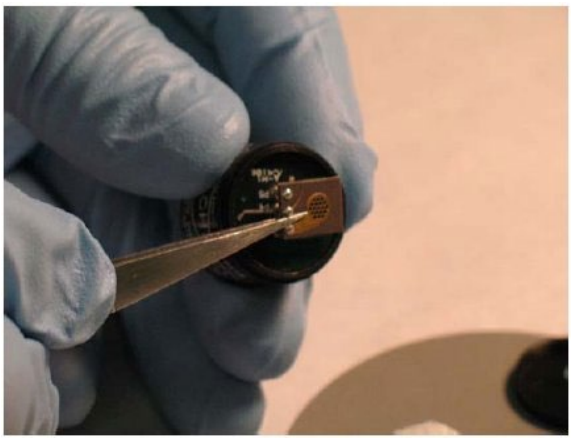

Figure 75 Removal of Cell Assembly

6. With fine tipped tweezers, grasp the lamp by placing the tips in the housing notch and gently pulling it out. Be careful not to scratch the lamp lens or chip the edges.

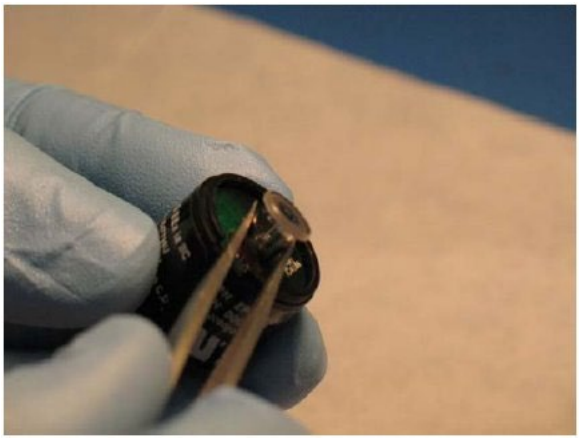

Figure 76 Removal of Lamp

Cleaning the Lamp

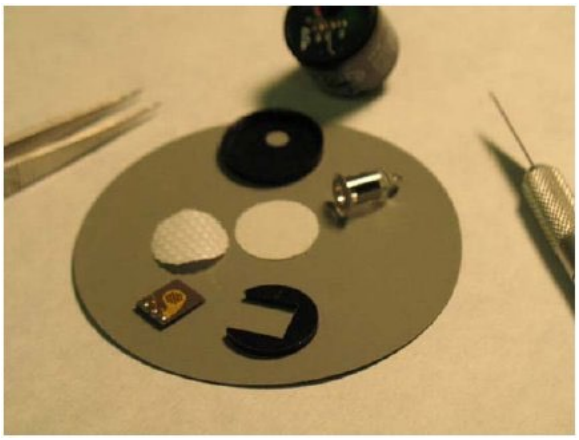

Figure 77 Lamp cleaning

Wearing gloves grab the lamp by the cylindrical glass body and clean the window by rubbing it against the Polishing Pad. Use a circular motion and try to keep the window surface flat relative to the pad. Five seconds of rubbing should be enough in most cases. Another indication of cleaning completeness is that about 1/16th of the pad surface is used during the process.

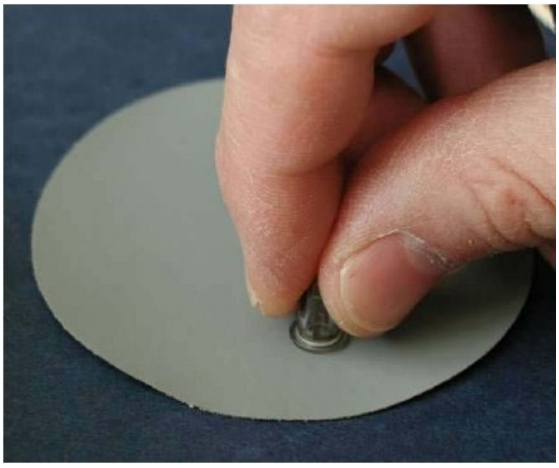

Figure 78 Polishing the Lamp

Reassembly

1. Install the lamp into the sensor, making sure that the lamp's metalized pads are aligned with the corresponding excitation springs inside the lamp cavity

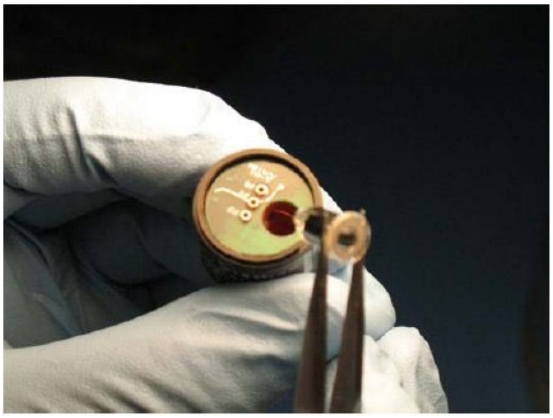

Figure 79 Lamp installation

2. With the end of the clean tweezers, or a clean blade of a screwdriver, press down firmly, being careful not to scratch the surface of the lamp.

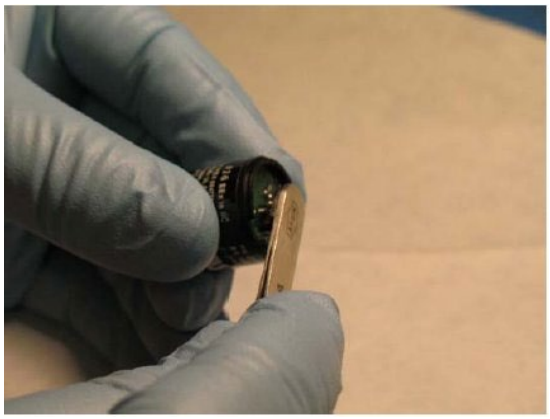

Figure 80 Lamp seating

3. Using fine tipped tweezers, install the cell assembly. Align the pins with the corresponding sockets on the sensor and push down on the end with the pins. Make sure the cell assembly is flush with the lamp window.

Figure 81 Cell Assembly installation

4. Place the spacer around the assembly.

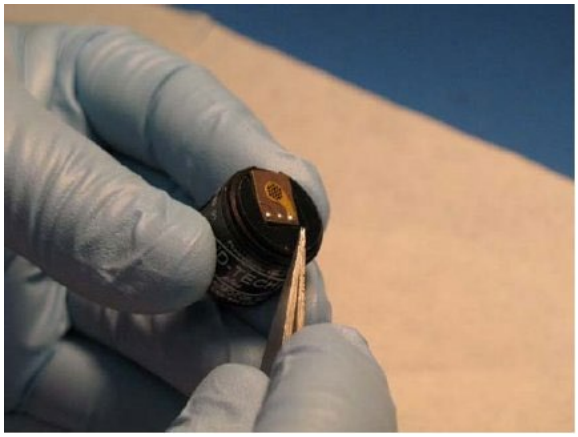

Figure 82 Spacer installation

5. Place the filter media over the Cell Assembly centered on the top of the sensor. Make sure the filters are installed in the correct order. Filter Media #2 first, then Filter Media #1 on top, with the shiny side up.

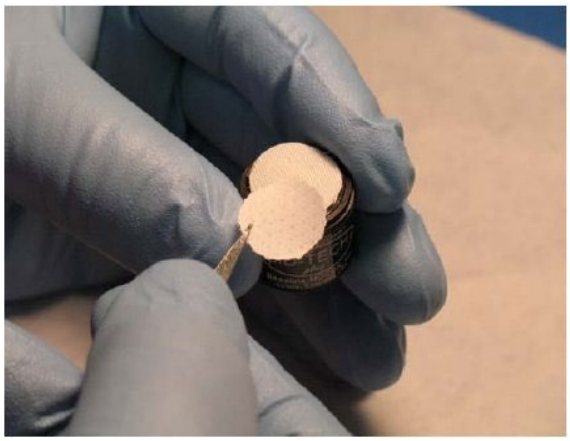

Figure 83 Installing Filter Media

6. Align the Cap Key with the notch on the housing. Starting at the side opposite the notch, press down until the Filter Cap snaps on to the housing. If the Cap Key is incorrectly aligned there will be a noticeable bulge on the side of the cap.

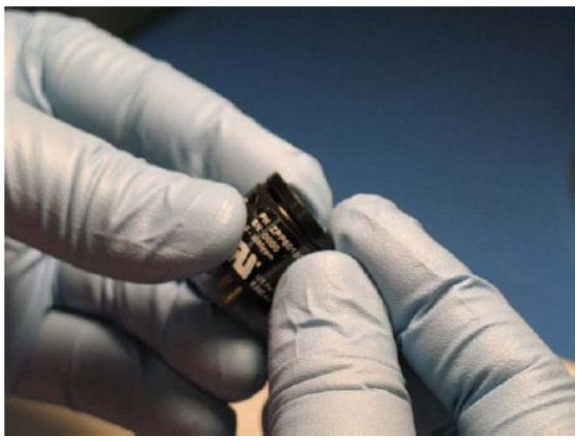

Figure 84 Replacing the Cap

Visual Inspection

The Sensor should be inspected annually. Inspect for signs of corrosion, pitting, and water damage. During visual inspection, the Splash Guard should be inspected to insure that it is not blocked. Examine the plug-in sensor for signs of physical blockage, electrolyte leakage, or severe corrosion. Also, inspect inside the Junction Box for signs of water accumulation or Terminal Block corrosion.

Condensation Prevention Packet

A moisture condensation packet should be installed in every explosion proof Junction Box. The moisture condensation prevention packet will prevent the internal volume of the J-Box from condensing and accumulating moisture due to day-night humidity changes. This packet provides a critical function and should be replaced annually. Detcon's PN is 960-202200-000.

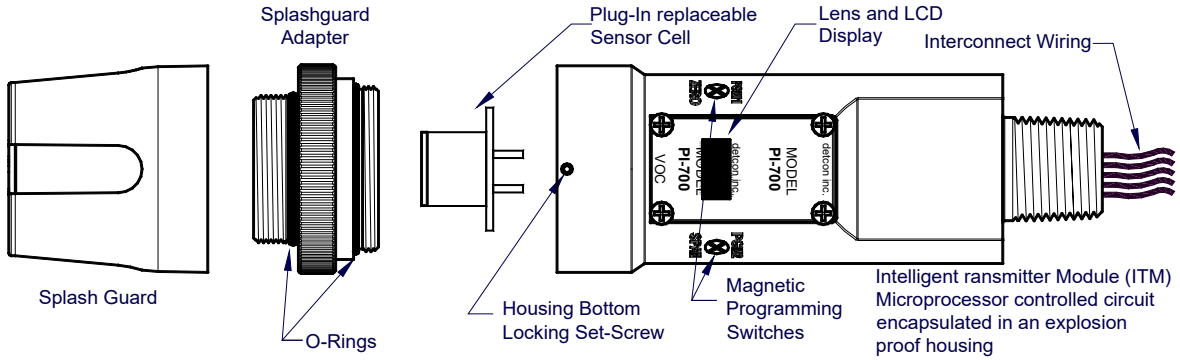

Figure 85 Sensor Assembly

8.5.2 Replacement of Intelligent Plug-in Sensor

NOTE: It is not necessary to remove power while changing the Intelligent plug-in VOC gas sensor in order to maintain area classification, since it is intrinsically safe.

a) Use a 1/16" Allen wrench to release the locking setscrew that locks the ITM and Splash Guard Adapter together (One turn will suffice - Do not remove setscrew completely).

b) Remove splashguard. Unthread and remove the Splash Guard Adapter from the ITM.

c) Gently pull the plug-in sensor out of the ITM. Remove moisture control packet if supplied. Transfer to new plug-in sensor. Orient the new plug-in sensor so that it matches with the female connector pins. When properly aligned, press the sensor in firmly to make the proper connection.

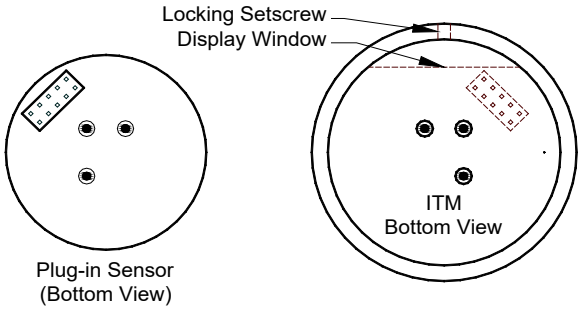

Figure 86 Sensor Cell and ITM Mating

d) Thread the Splash Guard Adapter onto the ITM to a snug fit and tighten the locking setscrew using the 1/16" Allen wrench. Reinstall the splashguard.

e) Verify the gas type and range of the new sensor by checking in View Program Status. It is recommended "AutoZero and AutoSpan functions be performed, as per Section 8.3.4, to match the new intelligent plug-in sensor with the ITM.

8.5.3 Replacement of ITM

a) Remove the power source from the sensor assembly. Disconnect all sensor wire connections at the J-Box taking note of the wire connections.

NOTE: It is necessary to remove power to the J-Box while changing the ITM in order to maintain area classification.

b) Use a wrench and the wrench flats provided at the top section of the ITM and unthread the ITM until it can be removed.

c) Use a 1/16" Allen wrench to release the locking setscrew that locks the ITM and Splash Guard Adapter together (One turn will suffice - Do not remove setscrew completely).

d) Remove splashguard. Unthread and remove the Splash Guard Adapter from the ITM.

e) Gently remove the plug-in gas sensor from the old ITM and install it in the new ITM. Orient the plug-in sensor pins so that they match with the female connector sockets on the new ITM then press the sensor in firmly to make proper connection.

f) Thread the Splash Guard Adapter onto the ITM until snug, tighten the locking setscrew and reconnect splashguard.

g) Feed the sensor assembly wires through the ¾" female NPT mounting hole and thread the assembly into the J-box until tight and the ITM lens faces toward the front access point. Connect the sensor assembly wires inside J-Box (Refer to Section 8.2.6, and Figure 64).

h) Perform Set AutoSpan Level, Set Serial ID, Set Range, and then perform a successful AutoZero and AutoSpan before placing sensor into service.

8.5.4 Replacement of PI-700 Sensor Assembly

a) Remove the power source from the sensor assembly. Disconnect all sensor wire connections at the J-Box.

NOTE: It is necessary to remove power to the J-Box while changing the PI-700 sensor in order to maintain area classification.

b) Use a wrench and the wrench flats provided at the top section of the ITM and unthread the ITM until it can be removed.

c) Use a 1/16" Allen wrench to release the locking setscrew that locks the ITM and Splash Guard Adapter together (One turn will suffice - Do not remove setscrew completely).

d) Remove splashguard. Unthread and remove the Splash Guard Adapter from the ITM.

e) Feed the new PI-700 sensor assembly wires through the ¾" female NPT mounting hole and thread the assembly into the J-box until tight and the ITM lens faces toward the front access point. Connect the sensor assembly wires inside J-Box (Refer to Section 8.2.6, and Figure 64).

f) PI-700 sensors are factory calibrated, however, they require an initial AutoZero and AutoSpan calibration (Section 8.3.4), and must be configured per customer specific application requirements.

8.6 Troubleshooting Guide

Refer to the list of Failsafe Diagnostic features listed in Section 8.3.6.2 for additional reference in troubleshooting activities. Listed below are some typical trouble conditions and their probable cause and resolution path.

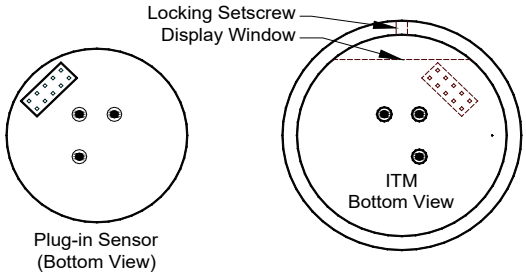

Figure 87 Sensor Cell and ITM Mating

Under-Range Fault

Probable Cause: Sensor Baseline drifted lower, Ambient Interference gasses reduced.

- Repeat AutoZero. Use Zero Air or N_2 source.
- Execute successful AutoSpan and verify adequate Sensor Life.
- Check Raw counts in View Sensor Status. Count should be close to 1,500 for high range and 3,000 for low range.
- Replace plug-in sensor if fault continues.

Missing Sensor Fault

Probable Cause: Sensor is Missing, Failed Plug-in Sensor Electronics, or ITM I.S. Barrier Failure.

- Make sure plug-in sensor is plugged in properly with correct orientation.
- Swap plug-in sensor into another ITM to determine if plug-in sensor problem or ITM problem.
- Replace the plug-in sensor if proven faulty.
- Replace the ITM if proven faulty.

AutoSpan Calibration Faults – (Range, Stability and Clearing)

To clear any AutoSpan Calibration fault, the AutoSpan process must be completed successfully (Section 8.3.5.2).

Use zero air gas after AutoSpan Calibration to avoid clearing fault from high background VOC levels.

Range Fault

Probable Causes: Failed Sensor, Cal Gas not applied or not applied at appropriate time, or problems w/ cal gas and delivery.

- Check validity of span gas (check MFG date on cal gas cylinder).
- Use proper cal gas regulators and tubing for highly absorbing or corrosive gasses.
- If using Splashguard with Integral Cal Port, must use Calibration Wind Guard or air movement can compromise span gas delivery.
- Check for obstructions affecting cal gas hitting sensor face (including being wet, blocked, or corroded).
- Verify adequate Sensor Life.
- Clean or replace the PID lamp.
- Replace the plug-in VOC sensor.

Stability Fault

Probable Causes: Failed Sensor, empty or close to empty Cal Gas Cylinder, or problems with cal gas and delivery.

- Check validity of span gas using pull tube or other means (check MFG date on cal gas cylinder).
- Use proper cal gas regulators and tubing for highly corrosive gasses.
- If using Splashguard with Integral Cal Port, must use Calibration Wind Guard or air movement can compromise span gas delivery.
- Check for obstructions affecting cal gas hitting sensor face (including being wet, blocked, or corroded).
- Verify adequate Sensor Life.
- Clean or replace the PID lamp.
- Replace the plug-in VOC sensor.

Clearing Fault

Probable Causes: Failed Sensor, Cal Gas not removed at appropriate time, problems with cal gas and delivery, or background of Target Gas.

- Must recover to < 5% of range in < 5 min after AutoSpan is complete.
- Use bottled air (zero air or N_2) if there is a known continuous background level.
- Check validity of span gas using pull tube or other means (check MFG date on cal gas cylinder).
- Use proper cal gas regulators and tubing for highly corrosive gasses.
- Check for obstructions affecting cal gas hitting sensor face (including being wet, blocked, or corroded).
- Verify adequate Sensor Life.
- Clean or replace the PID lamp.
- Replace the plug-in VOC sensor.

Poor Calibration Repeatability

Probable Causes: Failed Sensor, use of wrong Cal Gas or problems with cal gas and delivery, or Interference Gasses.

- Check for adequate Sensor Life.
- Check validity of span gas using pull tube or other means (check MFG date on cal gas cylinder).
- Use proper cal gas regulators and tubing for highly corrosive gasses.
- Check for obstructions affecting cal gas hitting sensor face (including being wet, blocked, or corroded).
- Verify adequate Sensor Life.
- Clean or replace the PID lamp.
- Replace the plug-in VOC sensor.

Unstable Output/ Sudden spiking

Possible Causes: Unstable power supply, inadequate grounding, or inadequate RFI protection.

- Verify Power source is stable.
- Verify field wiring is properly shielded and grounded.
- Contact Detcon to optimize shielding and grounding.

Nuisance Alarms

- Check condulet for accumulated water and abnormal corrosion on terminal blocks.
- If nuisance alarms are happening at night suspect condensation in condulet.
- Add or replace Detcon's Condensation Prevention Packet P/N 960-202200-000.
- Investigate the presence of other target gasses that are causing cross-interference signals.
- Determine if cause is RFI induced.

Processor and/or Memory Faults

- Recycle power in attempt to clear problem
- Restore Factory Defaults - This will clear the processor's memory and may correct problem.
- Remember to re-enter all customer settings for range and cal gas level after Restore Factory Defaults.
- If problem persists, replace the Intelligent Transmitter Module.

Unreadable Display

If due to excessive sunlight, install a sunshade to reduce glare.

Nothing Displayed – Transmitter not Responding

- Verify condulet has no accumulated water or abnormal corrosion.
- Verify required DC power is applied to correct terminals.
- Swap with a known-good ITM to determine if ITM is faulty.

Faulty 4-20 mA Output

If Sensor has a normal reading with no Faults displayed, and the 4-20 mA signal output is 0mA….

- Check that wiring is properly connected at terminal blocks and through to controller inputs.
- The 4-20 output loop must be closed (resistance of < 1000 ohms) to avoid the Loop Fault.
- Perform a "Signal Output Check" sequence via Section 8.3.5.7 and verify 4-20mA output with Current Meter.
- Swap with new ITM to determine if the ITM's 4-20mA output circuit has failed.
- If the 4-20mA current loop is still out of tolerance, contact Detcon at Detcon-service@teledyne.com, or contact Detcon customer service.

No Communication - RS-485 Modbus™

If sensor has a normal reading with no Faults displayed and the Modbus™ is not communicating….

- Verify that the correct (and non-duplicated) serial address is entered (per Section 8.3.5.3).
- Check that the wiring is properly connected at terminal blocks, and the serial loop is wired correctly.
- Perform a "Signal Output Check" per Section 8.3.5.7 and troubleshoot wiring.
- Consider adding a Modbus™ repeater if the distance from the nearest distribution drop is excessive.
- Swap with new ITM to determine if the ITM's serial output circuit is faulty.
- Refer to Detcon's "Guide to Proper Modbus™ Communications" Application Note.

8.7 Customer Support and Service Policy

Detcon
Shipping Address: 4055 Technology Forest Blvd., The Woodlands Texas 77381
Mailing Address: P.O. Box 8067, The Woodlands Texas 77387-8067
Phone: 713.559.9200

- www.teledynegasandflamedetection.com
- detcon-service@teledyne.com
- detcon-sales@teledyne.com

All Technical Service and Repair activities should be handled by the Detcon Service Department via phone or email at contact information given above. RMA numbers should be obtained from the Detcon Service Department prior to equipment being returned. For on-line technical service, customers should have ready the model number, part number, and serial number of product(s) in question.

All Sales activities (including spare parts purchase) should be handled by the Detcon Sales Department via phone or email at contact information given above.

Warranty Notice

Teledyne Detcon Inc. warrants the Model PI-700 VOC gas sensors to be free from defects in workmanship and material under normal use and service for two years from the date of shipment on the ITM electronics, and for the conditional warranty period of twelve months on the intelligent plug-in sensor.

Teledyne Detcon Inc. will repair or replace without charge any such equipment found to be defective during the warranty period. Full determination of the nature of, and responsibility for, defective or damaged equipment will be made by Teledyne Detcon Inc. personnel.

Defective or damaged equipment must be shipped to the Teledyne Detcon Inc. factory or representative from which the original shipment was made. In all cases, this warranty is limited to the cost of the equipment supplied by Teledyne Detcon Inc. The customer will assume all liability for the misuse of this equipment by its employees or other contracted personnel.

All warranties are contingent upon the proper use in the application for which the product was intended and does not cover products which have been modified or repaired without Teledyne Detcon Inc. approval, or which have been subjected to neglect, accident, improper installation or application, or on which the original identification marks have been removed or altered.

Except for the express warranty stated above, Teledyne Detcon Inc. disclaims all warranties with regard to the products sold. Including all implied warranties of merchantability and fitness and the express warranties stated herein are in lieu of all obligations or liabilities on the part of Teledyne Detcon Inc. for damages including, but not limited to, consequential damages arising out of, or in connection with, the performance of the product.

8.8 PI-700 Sensor Warranty

Intelligent Plug-in Sensor Warranty

Teledyne Detcon Inc. warrants, under normal intended use, each new intelligent plug-in sensor for a period of twelve months and under the conditions described as follows: The warranty period begins on the date of shipment to the original purchaser. The sensor element is warranted to be free of defects in material and workmanship. Should any sensor fail to perform in accordance with published specifications within the warranty period, return the defective part to Detcon, Inc., 4055 Technology Forest Blvd., The Woodlands, Texas 77381, for necessary repairs or replacement.

NOTE: The warranty only covers parts not working. This warranty does not cover conditions where the detector cell or lamp may be dirty and can be restored by cleaning.

Terms & Conditions

* The original serial number must be legible on each sensor element base.

* Shipping point is FOB the Detcon factory.

* Net payment is due within 30 days of invoice.

* Detcon, Inc. reserves the right to refund the original purchase price in lieu of sensor replacement.

ITM Electronics Warranty

Teledyne Detcon Inc. warrants, under intended normal use, each new Model 700 ITM to be free from defects in material and workmanship for a period of two years from the date of shipment to the original purchaser. All warranties and service policies are FOB the Detcon facility located in The Woodlands, Texas.

Terms & Conditions

* The original serial number must be legible on each ITM.

* Shipping point is FOB the Detcon factory.

* Net payment is due within 30 days of invoice.

* Detcon, Inc. reserves the right to refund the original purchase price in lieu of ITM replacement.

8.9 Appendix

8.9.1 Specifications

System Specifications

Sensor Type:	Continuous diffusion/adsorption type Photo Ionization Detector - PID Plug-in Replaceable Intelligent Type (with replaceable Lamp)
Sensor Life:	2 years typical
Measuring Ranges:	Gas Dependent, ranges as low as 0-10ppm or as high as 0-5,000ppm (Consult Detcon) Special Low Range 0-500ppb
Accuracy/ Repeatability:	±10% of reading of full-range or ±2% of range (greater of)
Response Time:	T50 <30 seconds; T90 < 60 seconds
Outputs:	Linear 4-20mA DC RS-485 Modbus™ RTU
Ingress Protection:	NEMA 4X, IP66
Safety Approvals:	CE Marking
Warranty:	Plug-in detector – 1 year Transmitter – 2 years

Environmental Specifications

Operating Temperature:	-4°F to +122°F; -20°C to +55°C (Special -40°C version available – no hazardous location approvals)
Storage Temperature:	--4°F to +122°F; -20°C to +50°C
Operating Humidity:	0-100% RH Non-Condensing

Mechanical Specifications

Dimensions	7"H x 2.2" Dia.; 178mmH x 65mm Dia. (sensor assembly only) 11"H x 6.1"W x 3.75"D; 280mmH x 155mmW x 96mmD (with junction box) Mounting holes (J-box) 5.5"; 140mm center to center
Weight:	2 lbs; 0.907kg (sensor only) 6 lbs; 2.72kg (w/aluminum j-box) 9 lbs; 4.08kg (w/stainless steel j-box)

Electrical Specifications

Input Voltage:	11-30 VDC
Power Consumption:	Normal operation = 68mA (<1.7 watt) Maximum = 75mA (2 watts)
Inrush current:	1.67A @ 24V
RFI/EMI Protection:	Complies with EN50270:2015
Analog Output:	Linear 4-20mA DC current (1000 ohms maximum loop load @ 24VDC)

0mA	All Fault Diagnostics
2mA	In-Calibration
4-20mA	0-100% full-scale
22mA	Over-range condition

Serial Output:	RS-485 Modbus™ RTU
Baud Rate:	9600 BPS (9600,N,8,1 Half Duplex)
Status Indicators:	4-digit LED Display with gas concentration full-script menu prompts for AutoSpan, Set-up Options, and Fault Reporting
Faults Monitored:	Loop, Input Voltage, Zero, Missing Sensor, Processor, Memory, Calibration
Cable Requirements:	Power/Analog: 3-wire shielded cable Maximum distance is 13,300 feet with 14 AWG Serial Output: 2-wire twisted-pair shielded cable specified for RS-485 use Maximum distance is 4,000 feet to last sensor
I/O Protection:	Over-Voltage, Miss-wiring, EMI/RFI Immunity

8.9.2 Gas Reference Table

Table 23 Gas Factor Table

Compound Name	*Synonym/Abbreviation*	*Formula*	*Response Factor*	*[2]Confirmed Value*	*IP (eV)*	*TWA*
Acetaldehyde		C2H4O	5.5	+	10.23	C25
Acetic Acid	Ethanoic Acid	C2H4O2	22	+	10.66	10
Acetic Anhydride	Ethanoic Acid Anhydride	C4H6O3	6.1	+	10.14	5
Acetone	2-Propanone	C3H6O	1.1	+	9.71	500
Acetonitrile	Methyl cyanide, Cyanomethane	C2H3N	NR		12.19	40
Acetylene	Ethyne	C2H2	NR		11.40	ne
Acrolein	Propenal	C3H4O	3.9	+	10.10	0.1
Acrylic Acid	Propenoic Acid	C3H4O2	12	+	10.60	2
Acrylonitrile	Propenenitrile	C3H3N	NR	+	10.91	2
Allyl alcohol		C3H6O	2.4	+	9.67	2
Allyl chloride	3-Chloropropene	C3H5Cl	4.3		9.9	1
Ammonia		H3N	9.7	+	10.16	25
Amyl alcohol	mix of n-pentyl acetate & 2-Methylbutyl acetate	C5H12O	5		10.00	100
Aniline	Aminobenzene	C7H7N	0.5	+	7.72	2
Anisole	Methoxybenzene	C7H8O	0.8		8.21	ne
Arsine	Arsenic trihydride	AsH3	1.9	+	9.89	0.05
Benzaldehyde		C7H6O	?		9.49	ne
Benzene		C6H6	0.5	+	9.25	0.5
Benzonitrile	Cyanobenzene	C7H5N	1.6		9.62	ne
Benzyl alcohol	a-Hydroxytoluene, Hydroxymethylbenzene, Benzenemethanol	C7H8O	1.1	+	8.26	ne

[2] NR = not recommended (does not register)
? = measurable but no data exist
Confirmed Value = "+" means actual gas has been used to verify RF, "blank" means it is an empirical estimate
IP = is the gases ionization potential (only gases < 10.6eV will respond to sensor)
TWA/Time Weighted Average = generally accepted limit for safe 8 hour exposure (in ppm)
ne = None Established

Compound Name	Synonym/Abbreviation	Formula	Response Factor	[2]Confirmed Value	IP (eV)	TWA
Benzyl chloride	a-Chlorotoluene, Chloromethylbenzene	C7H7Cl	0.6	+	9.14	1
Benzyl formate	Formic acid benzyl ester	C8H8O2	0.73	+		ne
Boron trifluoride		BF3	NR		15.5	C1
Bromine		Br3	1.30	+	10.51	0.1
Bromobenzene		C6H5Br	0.6		8.98	ne
2-Bromoethyl methyl ether		C3H7OBr	0.84	+	~10	ne
Bromoform	Tribromomethane	CHBr3	2.5	+	10.48	0.5
Bromopropane, 1-	n-Propyl bromide	C3H7Br	1.5	+	10.18	ne
Butadiene	1,2-Butadiene, Vinyl ethylene	C4H6	0.85	+	9.07	2
Butadiene diepoxide, 1, 3-	1,2,3,4-Diepoxybutane	C4H6O2	3.5	+	~10	ne
Butane		C4H10	67		10.53	ne
Butanol, 1-	Butyl alcohol, n-Butanol	C4H10O	4.7	+	9.99	C50
Butanol, t-	tert-butanol, t-Buty alcohol	C4H10O	2.9	+	9.90	100
Butene, 1-	1-Butylene	C4H8	0.9		9.58	ne
Butoxyethanol, 2-	Butyl Cellosolve, Ethyleneglycol monobutyl ether	C6H14O2	1.2	+	<10	25
Butyl acetate, n-		C6H12O2	2.6	+	10	150
Butyl acrylate, n-	Butyl 2-propenoate, Acrylic acid butyl ester	C7H12O2	1.6	+		10
Butylamine, n-		C4H11N	1.1	+	8.71	C5
Butyl cellosolve	see 2-Butoxyethanol					
Butyl hydroperoxide, t-		C4H10O2	1.6	+	<10	1
Butyl mercaptan	1-Butanethiol	C4H10S	0.52	+	9.14	0.5
Carbon disulfide		CS2	1.2	+	10.07	10
Carbon monoxide		CO	NR	+	14.07	50
Carbon tetrachloride	Tetrachloromethane	CCl4	NR	+	11.47	5
Carbonyl sulfide	Carbon Oxysulfide	COS	NR		11.18	

Compound Name	Synonym/Abbreviation	Formula	Response Factor	[2]Confirmed Value	IP (eV)	TWA
Cellosolve (see 2-Ethoxyethanol)						
CFC-14 (see Tetrafluoromethane)						
CFC-113 (see 1,1,2-Trichloro-1,2,2-trifluoroethane)						
Chlorine		Cl2	NR		11.48	0.5
Chlorine dioxide		ClO2	NR	+	10.57	0.1
Chloro-1,3-butadiene, 2-	Chloroprene	C4H5Cl	3			10
Chlorobenzene	Monochlorobenzene	C6H5Cl	0.40	+	9.06	10
Chloro-1, 1-difluoroethane, 1-(R-142B)		C2H3ClF2	NR		12.0	
Chlorodifluoromethane	HCFC-22, R-22	CHClF2	NR		12.2	1000
Chloroethane	Ethyl chloride	C2H5Cl	NR	+	10.97	100
Chloroethanol	Ethylene chlorhydrin	C2H5ClO			10.52	C1
Chloroethyl ether, 2-	bis(2-chloroethyle) ether	C4H8Cl2O	3.0	+		5
Chloroethyl methyl ether,2-	Methyl 2-chloroethyl ether	C3H7ClO	3			ne
Chloroform	Trichloromethane	CHCl3	NR	+	11.37	10
Chloropicrin		CCl3NO2	~400	+	?	0.1
Chlorotoluene, o-	o-Chloromethylbenzene	C7H7Cl	0.5		8.83	50
Chlorotoluene, p-	p-Chloromethylbenzene	C7H7Cl	0.5		8.69	ne
Crotonaldehyde	trans-2-Butenal	C4H6O	1.1	+	9.73	2
Cumene	Isopropylbenzene	C9H12	0.54	+	8.73	50
Cyanogen bromide		CNBr	NR		11.84	ne
Cyanogen chloride		CNCl	NR		12.34	C0.3
Cyclohexane		C6H12	1.4	+	9.86	300
Cyclohexanol	Cyclohexyl alcohol	C6H12O	?		9.75	50

Compound Name	Synonym/Abbreviation	Formula	Response Factor	[2]Confirmed Value	IP (eV)	TWA
Cyclohexanone		C6H10O	0.9	+	9.14	25
Cyclohexene		C6H10	0.8	+	8.95	300
Cyclohexylamine		C6H13N	1.2		8.62	10
Cyclopentane		C5H10	?		10.51	600
Decane		C10H22	1.4	+	9.65	ne
Diacetone alcohol	4-Methyl-4-hydroxy-2- pentanone	C6H12O2	0.7			50
Dibromoethane,1,2-	EDB, Ethylene dibromide, Ethylene bromide	C2H4Br2	1.7	+	10.37	ne
Dichlorobenzene, o	1,2-Dichlorobenzene	C6H4Cl2	0.47	+	9.08	
Dichlorodifluoromethane	CFC-12	CCl2F2	NR	+	11.75	1000
Dichloroethane, 1,2-	EDC, 1,2-DCA, Ethylene dichloride	C2H4Cl2	NR	+	11.04	10
Dichloroethene, 1,1-	1,1-DCE, Vinylidene chloride	C2H2Cl2	0.9		9.79	5
Dichloroethene, c-1,2-	c-1,2-DCE, cis-Dichloroethylene	C2H2Cl2	0.8		9.66	200
Dichloroethene, t-1,2-	t-1,2-DCE, trans-Dichloroethylene	C2H2Cl2	0.45	+	9.65	200
Dichloro-1-fluoroethane, 1,1-	R-141B	C2H3Cl2F	NR	+		ne
Dichloromethane (see Methylene chloride)						
Dichloropentafluoropropane	AK-255, mix of ~45% 3,3-dichloro-1,1,1,2,2-pentafluoro-propane (HCFC-225ca) & ~55% 1,3-Dichloro-1,1,2,2,3-pentafluoropropane (HCFC-225cb)	C3HCl2F5	NR	+		ne
Dichloropropane, 1,2		C3H6Cl2	NR		10.87	75
Dichloro-1-propene, 1,3-		C3H4C12	0.96	+	<10	1
Dichloro-1-propene, 2,3-		C3H4Cl2	1.3	+	<10	ne
Dichloro-1,1,1-trifluoro-ethane, 2,2-	R123	C2HCl2F3	NR	+	11.5	ne
Dichlorvos	Vapona; O,O-dimethyl O-dichlorovinyl phospate	C4H7Cl2O4P	0.9	+	<9.4	0.1
Dicyclopentadiene	DCPD, Cyclopentadiene dimer	C10H12	0.5	+	8.8	5

Compound Name	Synonym/Abbreviation	Formula	Response Factor	[2]Confirmed Value	IP (eV)	TWA
Diesel Fuel #1		m.w. 226	0.9	+		
Diesel Fuel #2		m.w. 216	0.7	+		
Diethylamine		C4H11N	1	+	8.01	5
Diethylaminopropylamine, 3-		C7H18N2	1.3			
Diethylmaleate		C8H12O4	4			ne
Diethyl sulfide	see Ethyl sulfide					
Diisopropylamine		C6H15N	0.74	+	7.73	5
Diketene	Ketene dimer	C4H4O2	2.0	+	9.6	0.5
Dimethylacetamide, N,N-	DMA	C4H9NO	0.8	+	8.81	10
Dimethylamine		C2H7N	1.5		8.23	5
Dimethyl carbonate	Carbonic acid dimethyl ester	C3H6O3	~70	+	~10.5	ne
Dimethyl disulfide	DMDS	C2H6S2	0.20	+	7.4	ne
Dimethylethylamine	DMEA	C4H11N	1.0	+	7.74	~3
Dimethylformamide, N,N-	DMF	C3H7NO	0.8		9.13	10
Dimethylhydrazine, 1,1-	UDMH	C2H8N2	0.8	+	7.28	0.01
Dimethyl methylphosphonate	DMMP, methyl phosphonic acid dimethyl ester	C3H9O3P	4.3	+	10.0	ne
Dimethyl sulfate		C2H6O4S	~20	+		0.1
Dimethyl sulfide	see Methyl sulfide					
Dimethyl sulfoxide	DMSO, Methyl sulfoxide	C2H6OS	1.4	+	9.10	ne
Dioxane, 1,4-		C4H8O2	1.3		9.19	25
Dowtherm A see Therminol						
DS-108F Wipe Solvent	Ethyl lactate/Isopar H/ Propoxypropanol ~7:2:1	m.w. 118	1.6	+		ne
Epichlorohydrin	ECH Chloromethyloxirane, 1-chloro2,3-epoxypropane	C2H5ClO	8.5	+	10.2	0.5
Ethane		C2H6	NR	+	11.52	ne
Ethanol	Ethyl alcohol	C2H6O	12	+	10.47	1000

Compound Name	Synonym/Abbreviation	Formula	Response Factor	[2]Confirmed Value	IP (eV)	TWA
Ethanolamine (not recommended)	MEA, Monoethanolamine	C2H7NO	1.6	+	8.96	3
Ethene	Ethylene	C2H4	10	+	10.51	ne
Ethoxyethanol, 2-	Ethyl cellosolve, Ethylene glycol monoethyl ether	C4H10O2	1.3		9.6	5
Ethyl acetate		C4H8O2	4.6	+	10.01	400
Ethyl acrylate		C5H8O2	2.4	+	(<10.3)	5
Ethylamine		C2H7N	0.8		8.86	5
Ethylbenzene		C8H10	0.52	+	8.77	100
Ethylene glycol	1,2-Ethanediol	C2H6O2	16	+	10.16	C100
Ethylene oxide	Oxirane, Epoxyethane	C2H4O	13	+	10.57	1
Ethyl ether	Diethyl ether	C4H10O	1.1	+	9.51	400
Ethyl 3-ethoxypropionate	EEP	C7H14O3	0.75	+		ne
Ethyl formate		C3H6O2	?		10.61	100
Ethyl hexyl acrylate, 2-	Acrylic acid 2-ethylhexyl ester	C11H20O2	1.1	+		ne
Ethyl (S)-(-)-lactate see also DS-108F	Ethyl lactate, Ethyl (S)-(-)-hydroxypropionate	C5H10O3	3.2	+	~10	ne
Ethyl mercaptan	Ethanethiol	C2H6S	0.56	+	9.29	0.5
Ethyl sulfide	Diethyl sulfide	C4H10S	0.5	+	8.43	ne
Formaldehyde	Formalin	CH2O	?		10.87	C0.3
Formic acid		CH2O2	NR	+	11.33	5
Furfural	2-Furaldehyde	C5H4O2	0.92	+	9.21	2
Furfuryl alcohol		C5H6O2	0.80	+	<9.5	10
Gasoline #1		m.w. 72	0.9	+		300
Gasoline #2, 92 octane		m.w. 93	1.0	+		300
Glutaraldehyde	1,5-Pentanedial, Glutaric dialdehyde	C5H8O2	0.8	+		C0.0
Halothane	2-Bromo-2-chloro-1,1,1-trifluoroethane	C2HBrClF3	NR			

Compound Name	Synonym/Abbreviation	Formula	Response Factor	[2]Confirmed Value	IP (eV)	TWA
HCFC-22 (see Chlorodifluoromethane)						
HCFC-123 (see 2,2-Dichloro-1,1,1-trifluoroethane, R-123)						
HCFC-141B (see 1,1-Dichloro-1-fluorethane)						
HCFC-142B (see 1-Chloro-1,1-difluoroethane)						
HCFC-134A (see 1,1,1,2-Tetrafluoroethane)						
HCFC-225 (see Dichloropentafluoropropane)						
Heptane, n-		C7H16	2.8	+	9.92	400
Hexamethyldisilazane,1,1,1,3,3,3-	HMDS	C6H19NSi2	0.2	+	~8.6	
Hexane, n		C6H14	4.3	+	10.13	50
Hexanol, 1-	Hexyl alcohol	C6H14O	2.5	+	9.86	ne
Hexene, 1-		C6H12	0.8		9.44	30
Hydrazine		H4N2	2.6	+	8.1	
Hydrogen	Synthesis gas	H2	NR	+	15.43	ne
Hydrogen cyanide	Hydrocyanic acid	HCN	NR	+	13.60	C4.7
Hydrogen peroxide		H2O2	NR	+	10.54	1
Hydrogen sulfide		H2S	3.3	+	10.45	10
Iodine		I2	0.1	+	9.40	C0.1
Iodomethane	Methyl iodide	CH3I	0.2	+	9.54	2
Isoamyl acetate	Isopentyl acetate	C7H14O2	2.1		<10	100
Isobutne	2-Methylpropane	C4H10	100	+	10.57	ne
Isobutanol	2-Methyl-2-propanol	C4H10O	3.8	+	10.02	50
Isobutylene	Isobutxene, Methyl butene	C4H8	1.00	+	9.24	ne
Isobutyl acetate		C6H12O2	2.6			150

Compound Name	Synonym/Abbreviation	Formula	Response Factor	[2]Confirmed Value	IP (eV)	TWA
Isobutyl acrylate	Isobutyl 2-propenoate, Acrylic acid Isobutyl ester	C7H12O2	1.5	+		ne
Isoflurane	1-Chloro-2,2,2-trifluoroethyl difluoromethyl ether, forane	C3H2ClF5O	NR		~11.7	ne
Isooctane	2,2,4-Trimethylpentane	C8H18	1.2		9.86	ne
Isopar E Solvent	Isoparaffinic hydrocarbons	m.w. 121	0.8	+		ne
Isopar G Solvent	Photocopier diluent	m.w. 148	0.8	+		ne
Isopar K Solvent	Isoparaffinic hydrocarbons	m.w. 156	0.5	+		ne
Isopar L Solvent	Isoparaffinic hydrocarbons	m.w. 163	0.5	+		
Isopar M Solvent	Isoparaffinic hydrocarbons	m.w. 191	0.7	+		
Isopentane	2-Methylbutane	C5H12	8.2			ne
Isophorone		C9H14O	?		9.07	C5
Isoprene	2-Methyl-1,3-butadiene	C5H8	0.63	+	8.85	ne
Isopropanol	Isopropyl alcohol, 2-propanol	C3H8O	6.0	+	10.12	400
Isopropyl acetate		C5H10O2	2.6		9.99	250
Isopropyl ether	Diisopropyl ether	C6H14O	0.8		9.20	250
Jet fuel JP-4	Jet B, Turbo B, Wide cut type aviation fuel	m.w. 115	1.0	+		ne
Jet fuel JP-5	Jet 5, Kerosene type aviaton fuel	m.w. 167	0.6	+		15
Jet fuel JP-8	Jet A-1, Kerosene type aviation fuel	m.w. 165	0.6	+		15
Limonene, D-	(R)-(+)-Limonene	C10H16	0.33	+	~8.2	ne
Kerosene (C10-C16 petro. distillate - see Jet Fuels)						
MDI (see 4,4'-Methylenebis (phenylisocynate))						
Mesitylene	1,3,5-Trimethylbenzene	C9H12	0.35	+	8.41	ne
Methane	Natural gas	CH4	NR	+	12.51	ne
Methanol	Methyl alcohol, carbinol	CH4O	NR	+	10.85	200

Compound Name	Synonym/Abbreviation	Formula	Response Factor	[2]Confirmed Value	IP (eV)	TWA
Methoxyethanol, 2-	Methyl cellosolve, Ethylene glycol monomethy ether	C3H8O2	2.4	+	10.1	5
Methoxyethoxyethanol, 2-	2-(2-Methoxyethoxy)ethanol Diethylene glycol monomethyl ether	C7H16O3	1.2	+	<10	ne
Methyl acetate		C3H6O2	6.6	+	10.27	200
Methyl acrylate	Methyl 2-propenoate, acrylic acid methyl ester	C4H6O2	3.7	+	-9.9	2
Methylamine	Aminomethane	CH5N	1.2		8.97	
Methyl bromide	Bromomethane	CH3Br	1.7	+	10.54	1
Methyl t-butyl ether	MTBE, tert-Butyl methyl ether	C5H12O	0.9	+	9.24	40
Methyl cellosolve (see 2-Methoxyethanol)						
Methyl chloride	Chloromethane	CH3Cl	NR	+	11.22	50
Methylcyclohexane		C7H14	0.97	+	9.64	400
Methylene bis (phenyl-isocyanate)	MDI, Mondur M	C15H10N2O2	Very slow ppb level response	+		0.005
4,4'-Methylene chloride	Dichloromethane	CH2Cl2	NR	+	11.32	25
Methyl ether	Dimethyl ether	C2H6O	3.1	+	10.03	ne
Methyl ethyl ketone	MEK, 2-Butanone	C4H8O2	0.9	+	9.51	200
Methylhydrazine	Monomethylhydrazine, Hydrazomethane	C2H6N2	1.2	+	7.7	0.01
Methyl isobutyl ketone	MIBK, 4-Methyl-2-pentanone	C6H12O	0.8	+	9.30	50
Methyl Isocyanate	CH3NCO	C2H3NO	4.6	+	10.67	0.02
Methyl isothiocyanate	CH3NCS	C2H3NS	0.45	+	9.25	ne
Methyl mercaptan	Methanethiol	CH4S	0.54		9.44	0.5
Methyl methacrylate		C5H8O2	1.5	+	9.7	100
Methyl nonafluorobutyl ether	HFE-7100DL	C5H3F9O	NR	+		ne
Methyl-1,5-pentane-diamine, 2- (coats lamp)	Dytek-A amine, 2-Methyl pentamethylenediamine	C6H16N2	~0.6	+	<9.0	ne

Compound Name	Synonym/Abbreviation	Formula	Response Factor	[2]Confirmed Value	IP (eV)	TWA
Methyl propyl ketone	MPK, 2-Pentanone	C5H12O	0.93	+	9.38	200
Methyl-2-pyrrolidinone, N-	NMP, N-Methylpyrrolidone, 1-Methyl-2-pyrrolidinone, 1-Methyl-2-pyrrolidone	C5H9NO	0.8	+	9.17	ne
Methyl salicylate	Methyl 2-hydroxybenzoate	C8H8O3	1		~9	ne
Methylstyrene, a-	2-Propenylbenzene	C9H10	0.5		8.18	50
Methyl sulfide	DMS, Dimethyl sulfide	C2H6S	0.44	+	8.69	ne
Mineral spirits (Stoddard Solvent, see also Viscor 120B)		m.w. 144	0.7	+		100
Mineral spirits Viscor 120B Calibration Fluid, b.p. 156-207°C		m.w. 142	0.7	+		100
Mustard	HD, Bis (2-chloroethyl) sulfide	C4H8Cl2S	0.6			0.0005
Naphthalene	Mothballs	C10H8	0.42	+	8.13	10
Nitric oxide		NO	5.2	+	9.26	25
Nitrobenzene		C6H5NO2	1.9	+	9.81	1
Nitroethane		C2H5NO2	NR		10.88	100
Nitrogen dioxide		NO2	16.0	+	9.75	3
Nitromethane		CH3NO2	NR		11.02	20
Nitropropane, 2-		C3H7NO2	NR		10.71	10
Nonane		C9H20	1.4		9.72	200
Octane, n-		C8H18	1.8	+	9.82	300
Pentane		C5H12	8.4	+	10.35	600
Peracetic acid	Peroxyacetic acid, Acetyl Hydroperoxide	C2H4O3	NR	+		ne
Peracetic/Acetic acid mix	Peroxyacetic acid, Acetyl Hydroperoxide	C2H4O3/C2H4O2	50	+		ne
Perchloroethene	PCE, Perchloroethylene, Tetrachloroethylene	C2Cl4	0.57	+	9.32	25

Compound Name	Synonym/Abbreviation	Formula	Response Factor	[2]Confirmed Value	IP (eV)	TWA
PGME	Propylene glycol methyl ether, 107-98-2 1-Methoxy-2-propanol	C6H12O3	1.5	+		100
PGMEA	Propylene glycol methyl ether 108-65-6 acetate, 1-Methoxy-2-acetoxypropane, 1-Methoxy-2-propanol acetate	C6H12O3	1.0	+		ne
Phenol	Hydroxybenzene	C6H6O	1.0	+	8.51	5
Phosgene	Dichlorocarbonyl	CCl2O	NR		11.2	0.1
Phosphine in N2		PH3	3.9	+	9.87	0.3
Photocopier Toner	Isoparaffin mix		0.5	+		
Picoline, 3-	3-Methylpyridine	C6H7N	0.9		9.04	
Pinene, a-		C10H16	0.31	+	8.07	ne
Pinene, b		C10H16	0.37	+	~8	100
Piperylene, isomer mix	1,3-Pentadiene	C5H8	0.69	+	8.6	100
Propane		C3H8	NR	+	10.95	2500
Propanol, n-	Propyl alcohol	C3H8O	5		10.22	200
Propene	Propylene	C3H6	1.4	+	9.73	ne
Propionaldehyde	Propanal	C3H6O	1.9		9.95	ne
Propyl acetate, n-		C5H10O2	3.5		10.04	200
Propylene carbonate		C4H6O3	62	+	10.5	ne
Propylene glycol	1,2-Propanediol	C3H8O2	5.5	+	<10.2	ne
Propylene oxide	Methyloxirane	C3H6O	6.6	+	10.22	20
Propyleneimine	2-Methylaziridine	C3H7N	1.3	+	9.0	2
Propyl mercaptan, 2-	2-Propanethiol, Isopropyl mercaptan	C3H7N	0.66	+	9.2	ne
Pyridine		C5H5N	0.7	+	9.25	5
Pyrrolidine (coats lamp)	Azacyclohexane	C4H9N	1.3	+	~8.0	ne
RR7300 (PGME?PGMEA)	70:30 PGME:PGMEA (1- Methoxy-2- propanol:1- Methoxy-2-acetoxypropane)	C4H10O2 / C6H12O3	1.4	+		ne

Compound Name	Synonym/Abbreviation	Formula	Response Factor	[2]Confirmed Value	IP (eV)	TWA
Sarin	GB, Isopropyl methylphosphonofluoridate	C4H10FO2P	~3			
Stoddard Solvent (see Mineral Spirits)						
Styrene		C8H8	0.40	+	8.43	20
Sulfur dioxide		SO2	NR	+	12.32	
Sulfur hexafluoride		SF6	NR		15.3	1000
Sulfuryl fluoride	Vikane	SO2F2	NR		13.0	6
Tabun	Ethyl N, N-dimethylphosphoramidocyanidate	C5H11N2O2P	0.8			15ppt
Tetrachloroethane, 1,1,1,2-		C2H2Cl4	NR		~11.1	ne
Tetrachloroethane, 1,1,2,2-		C2H2Cl4	NR	+	~11.1	1
Tetraethyllead	TEL	C8H20Pb	0.3		~11.1	0.008
Tetraethyl orthosilicate	Ethyl silicate, TEOS	C8H20O4Si	0.7	+	~9.8	10
Tetrafluoroethane, 1,1,1,2-	HFC-134A	C2H2F4	NR			ne
Tetrafluoroethene	TFE, Tetrafluoroethylene, Perfluoroethylene	C2F4	~15		10.12	ne
Tetrafluoromethane	CFC-14, Carbon tetrafluoride	CF4	NR	+	>15.3	ne
Tetrahydrofuran	THF	C4H8O	1.7	+	9.41	200
Tetramethyl orthosilicate	Methyl silicate, TMOS	C4H12O4Si	1.9	+	~10	1
Therminol VP-1	Dowthern,3:1 Diphenyl oxide: Biphenyl	C12H10O C12H10	0.7	+		ne
Toluene	Methylbenzene	C7H8	0.50	+	8.82	50
Tolylene-2,4-diisocyanate	TDI, 4-Methyl-1,3-phenylene- 2,4-diisocyanate	C9H6N2O2	1.4	+		0.002
Trichlorobenzene, 1,2,4-	1,2,4-TCB	C6H3Cl3	0.46	+	9.04	C5
Trichloroethane, 1,1,1-	1,1,1-TCA, Methyl chloroform	C2H3Cl3	NR	+	11	350
Trichloroethane, 1,1,2-	1,1,2-TCA	C2H3Cl3	NR	+	11.0	10
Trichloroethene	TCE, Trichloroethylene	C2HCl3	0.54	+	9.47	50

Compound Name	Synonym/Abbreviation	Formula	Response Factor	[2]Confirmed Value	IP (eV)	TWA
Trichlorotrifluoroethane, 1,1,2- CFC-113		C2Cl3F3	NR		11.99	1000
Triethylamine	TEA	C6H15N	0.9	+	7.3	1
Triethyl borate	TEB; Boric acid triethyl ester, Boron ethoxide	C6H15O3B	2.2	+	~10	
Triethyl phosphate	Ethyl phosphate	C6H15O4P	3.1	+	9.79	ne
Trifluoroethane, 1,1,2- Trimethylamine		C2H3F3	NR		12.9	ne
Trimethylbenzene, 1,3,5- (see Mesitylene)		C3H9N	0.9		7.82	5
Trimethyl borate	TMB; Boric acid trimethyl ester, Boron methoxide	C3H9O3B	5.1	+	10.10	ne
Trimethyl phosphate	Ethyl phosphate	C3H9O4P	8.0	+	9.99	ne
Turpentine	Pinenes (85%) + other diisoprenes	C10H16	0.3	+	~8	100
Undecane		C11H24	2		9.56	ne
Varsol (see Mineral Spirits)						
Vinyl actetate		C4H6O2	1.2	+	9.19	10
Vinyl bromide	Bromoethylene	C2H3Br	0.4		9.80	5
Vinyl chloride in N2	Chloroethylene, VCM	C2H3Cl	2.0	+	9.99	5
Vinylidene chloride – (see 1,1-Dicholorethene)						
Vinyl-2-pyrrolidinone, 1-	NVP, N-vinylpyrrolidone, 1-ethenyl-2-pyrrolidinone	C6H9NO	0.8	+		ne
Viscor 120B – (see Mineral Spirits - Viscor 120B Calibration Fluid)						
Xylene, m-		C8H10	0.4	+	8.56	
Xylene, o-		C8H10	0.6	+	8.56	
Xylene, p-		C8H10	0.5	+	8.44	

NR = not recommended (does not register)
? = measurable but no data exists
Confirmed Value = "+" means actual gas has been used to verify RF, "blank" means it is an empirical estimate
IP = is the gases ionization potential (only gases < 10.6eV will respond to sensor)

TWA/Time Weighted Average = generally accepted limit for safe 8 hour exposure (in ppm)
ne = None established

8.9.3 Spare Parts, Sensor Accessories, Calibration Equipment

Part Number	Spare Parts
927-P25500-000	PI-700 Intelligent Transmitter Module (ITM for VOC Gas Sensors)
602-003295-FLT	Model PI-700 Splash Guard Adapter with Integral Filter
377-P10000-0XX	Replacement Plug-in VOC gas sensor (≤20ppm where XX=range)
377-P20000-XXX	Replacement Plug-in VOC gas sensor (>20ppm where XXX=range)
500-003087-100	Transient Protection PCA
Sensor Accessories	
897-850800-010	NEMA 7 Aluminum Enclosure less cover – 3 port
897-850400-010	NEMA 7 Aluminum Enclosure Cover (Blank)
897-850801-316	NEMA 7 316SS Enclosure less cover – 3 port
897-850401-316	NEMA 7 316SS Enclosure Cover (Blank)
602-003295-000	Splashguard Adapter without Integral Filter
613-120000-700	Sensor Splashguard with Cal Port
613-2R0000-000	Remote Calibration Adapter
943-002273-000	Harsh Environment Sensor guard
327-000000-000	Programming Magnet
960-202200-000	Condensation prevention packet (for J-Box replace annually)
960-700PID-000	Moisture control Packet for plug-in sensor
017-557718-000	O-ring (used to secure Moisture Control Packet)
Calibration Accessories	
943-000000-000	Calibration Wind Guard
943-000006-132	Threaded Calibration Adapter
943-020000-000	Span Gas Kit: Includes calibration adapter, span gas humidifier, 200cc/min fixed flow regulator, and carrying case. (Not including gas).
942-001123-000	Zero Air 103Liters
See Detcon	For Isobutylene Span Gasses (Range Specific)
943-090005-502	500 cc/min Fixed Flow Regulator for span gas bottle
985-241100-321	In-Line Humidifying Tube 24"
Recommend Spare Parts for 2 Years	
927-P25500-000	PI-700 Intelligent Transmitter Module (ITM for VOC Gas Sensors)
600-003295-FLT	Model PI-700 Splash Guard Adapter with Integral Filter
377-P10000-0XX	Replacement Plug-in VOC gas sensor (≤20ppm where XX=range)
377-P20000-XXX	Replacement Plug-in VOC gas sensor (>20ppm where XXX=range)
500-003087-100	Transient Protection PCA
960-202200-000	Condensation prevention packet (for J-Box. Replace annually)
960-700PID-000	Moisture Control Packet for sensor
017-557718-000	O-ring (used to secure Moisture Control Packet)

9. Model HRT Bridge

For use with Model 700 series sensors

TELEDYNE DETCON, Inc.
4055 Technology Forest Blvd.,
The Woodlands, Texas 77381
Phone 713.559.9200

WWW.TELEDYNEGASANDFLAMEDETECTION.COM

9.1 Description

The HRT Bridge PCA is a bi-directional digital communication interface that provides data communication between the Model 700 sensors and HART®-enabled devices. The HART® (Highway Addressable Remote Transducer) Communication Protocol is a standard for sending and receiving digital information across analog wires between smart devices and a control host or monitoring system. A host can be any software application from a technician's hand-held device or laptop to a plant's process control, asset management, safety or other system using any control platform.

The HART Communication Protocol makes use of the Bell 202 Frequency Shift Keying (FSK) Standard to superimpose digital communication signals on the 4-20mA signal utilized by the Model 700 sensors. This enables two-way communication and makes it possible for additional information to be transferred to and from the sensor.

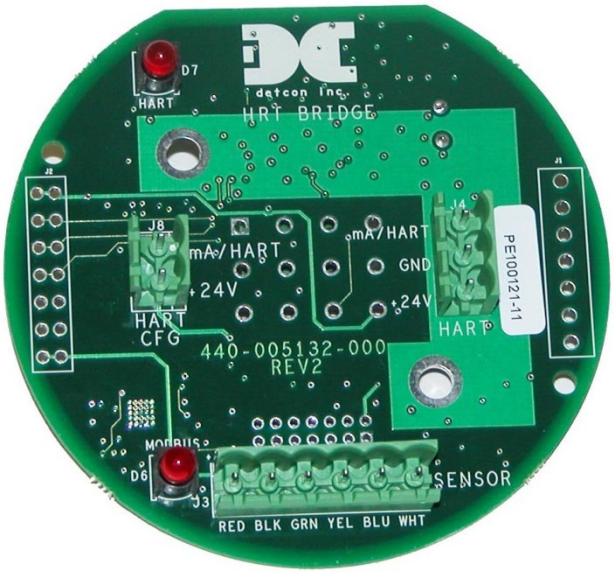

Figure 88 HRT Bridge PCA

The HRT Bridge PCA communicates with the Model 700 sensors via its Modbus™ interface and transfers that information to the HART Communication Protocol along with the 4-20mA Signal. This provides the ability for a HART Host System to communicate with the Model 700 sensor. This communication includes the ability for the Host to:

- Configure or re-configure the sensor
- Perform sensor diagnostics
- Troubleshoot the sensor
- Read additional information from the sensor
- Determine the sensor's health and status

9.2 Installation

The HRT Bridge PCA replaces the Transient Protection Assembly in the condulet the Model 700 sensor is attached to. The condulet and the Model 700 sensor should be mounted as prescribed in the sensor's manual. For units that have been ordered with the HRT Bridge installed, the section on installing the HRT Bridge PCA can be skipped.

NOTE: Block any unused ¾" NPT holes with the proper Plug. (Detcon P/N 8522-750)

NOTE: Install only where the ambient temperature at place of installation is within the rated temperature limits of this device (-40ºC to +70ºC).

NOTE: All devices connecting to the ¾" NPT conduit entries should be tightened to a minimum of 16 Foot-Pounds torque.

NOTE: The flamepath joints are not intended to be repaired if damaged.

NOTE: For ATEX use, cable glands, adapters, and/or blanking elements shall be ATEX certified to Ex d IIC and shall be installed.

WARNING: Cables and cable glands must be rated for ≥90°C.

NOTE: Use internal and external grounding points as required or recommended by electrical installation guidelines. Tighten to full hand-tight or 12 Foot-Lbs torque.

NOTE: Connect earth wire to crimped terminal (≥4mm^2) (Internal and external ground points)

9.2.1 Installation of HRT Bridge PCA

The HRT Bridge PCA replaces the Transient Protection Assembly (TPA) in the condulet attached to the Model 700 sensor. The sensor is wired to the HRT Bridge PCA the same way as it is on the TPA so no re-wiring of the sensor connector is necessary.

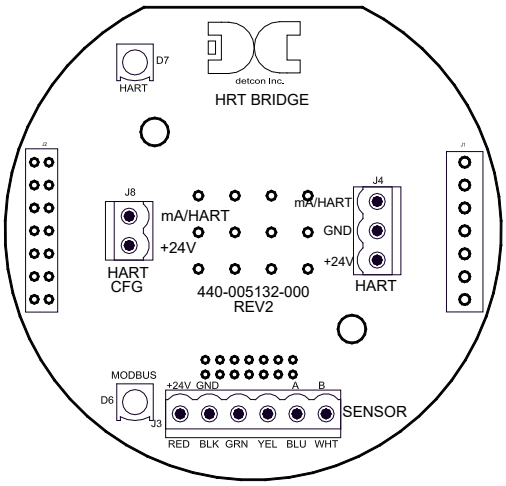

Figure 89 HRT Bridge PCA

1. Remove the power/mA output connector from the TPA if power is applied.
2. Remove the connector from the Transient Protection PCA that connects to the 700 sensor.
3. Remove the hardware holding the Transient Protection PCA and remove the TPA from the condulet.
4. Install the HRT Bridge PCA in the condulet, using the same hardware used with the TPA.
5. Plug the sensor's connector into J3 on the HRT Bridge PCA, labeled "SENSOR".
6. Wire the power and 4-20mA output as described below.

9.2.2 Connecting the HRT Bridge

The HRT Bridge connection to the Host is a simple 3 wire connection of Power, Power Return, and mA. Refer to Figure 89. Connect the 24VDC to the connector at J4 pin-3 labeled 24V. Connect the 24V Return to the connector at J4 pin 2 Labeled GND, and connect the 4-20mA to the connector at J4 pin 1 labeled mA/HART. The 4-20mA signal from the HRT Bridge must be connected to a load resistor to operate properly. If this signal is not terminated properly, the HRT Bridge, and the HART Interface will fail to work properly.

If not already plugged in, plug the connector from the Model 700 sensor into the header J3, labeled "SENSOR" on the HRT Bridge PCA.

The HART CFG Connector (J8) provides a connection for handheld devices such as the Emerson 375 Field Communicator without having to remove power from the unit. The two pins of the HART CFG connector are polarity independent and the two leads from the handheld configurator may be connected in any order.

9.3 Operation

When power is applied to the HRT Bridge PCA with the Model 700 sensor attached, the HRT Bridge will go through a boot up sequence that will last for approximately 30 seconds. During this time, the 4-20mA line will be held at 1mA. After the boot up sequence the HRT Bridge will enter normal operation, and communication with the Host will begin. A red LED (D7) Labeled “HART” on the HRT Bridge PCA will illuminate when the PCA is communicating with the HART Host.

The 4-20mA signal from the HRT Bridge must be connected to a load resistor for HART communication to operate properly. If this signal is not terminated properly, the HRT Bridge, and the HART Interface will fail to work. Normal termination for the 4-20mA signal is accomplished by connection to a Host device, which will have the correct load to terminate the signal properly.

If the HRT Bridge senses a fault in the sensor, it will take the 4-20mA signal down to 1mA. This 1mA signal will signify to the Host that a sensor fault has occurred, and the Host should, in turn, flag an error with the associated sensor.

The HRT Bridge communicates with the Model 700 sensor through the Modbus™. The 4-20mA signal from the 700 sensor should be connected to the HRT Bridge PCA even though it is not used. The HRT Bridge reads the appropriate Modbus™ register and creates the 4-20mA signal from the register reading. This allows the HRT Bridge complete control of the HART Communications. A red LED (D6) Labeled “MODBUS” will blink when communication with the sensor occurs.

The HART interface has the ability to take the sensor into calibration. If the sensor is taken into calibration via the HART interface, the HART Communication Protocol will inform the Host that the sensor is in calibration mode, and will not set a fault. The 4-20mA signal will be set at 2mA. Starting a calibration using the sensor interface and magnetic tool will also cause the 4-20mA to be set to 2mA.

9.4 Operator Interface

The HRT Bridge PCA provides the ability to interface with the sensor via the HART Interface. The HART interface Host can be a PC, a Laptop, or several handheld devices such as the Emerson 375 Field Communicator. Although the displays on each device may be different and the menu names may change, the information provided should be the same. The HART Interface consists of three basic Menus, each with a subset of menus or screens:

Device Variables Menu
- Primary Variables
- Identification

Diagnostics Menu
- Device Status
- Sensor Status

Device Status Menu
- Configuration Setup
- Calibration
- HART Setup

Note: The screen shots shown below are taken from the HART Communication Foundation SDC625 Reference Host. The user's screen appearance may be different depending on the HART host used.

9.4.1 Device Menu

9.4.1.1 Primary Variables

The primary Variable Screen contains the basic information from the sensor and is broken into four basic sections. None of these variables are changeable, and are directly read from the sensor.

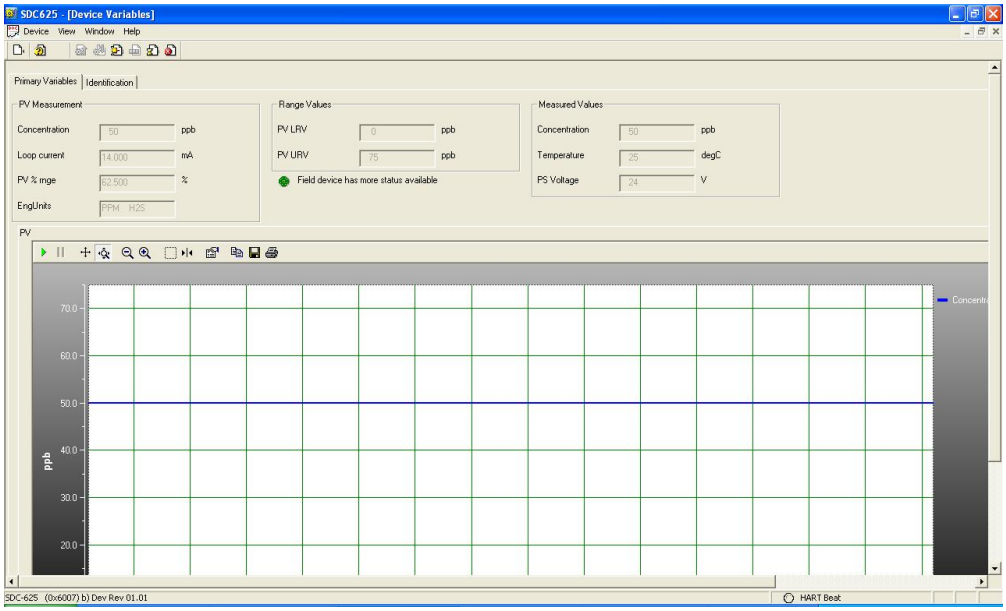

Figure 90 Primary Variables

Primary Variables

- Concentration – the value of the gas concentration measured by the sensor. The units of measurement (ppm, ppb, or %) are shown to the right of the concentration value. This is the HART primary variable.
- Loop Current – the value of the output 4-20mA loop current
- PV %rnge – Primary variable percent of range
- EngUnits – the measurement units and gas type

Range Variables

- PV LRV – Primary variable lower range value (normally 0 for most sensors)
- PV URV – Primary variable upper range value, or the range of the sensor (i.e. 100ppm, 10ppm, 5%, etc.)

Device Status

- Indicates the device has more status information available. If this icon is green, no additional status information is available. If it is red, refer to Section 9.4.2 for more information.

Measured Values

- Concentration – the value of the gas concentration measured by the sensor. The units of measurement (ppm, ppb, or %) are shown to the right of the concentration value
- Temperature – displayed in degrees Centigrade.
- PS Voltage – power supply voltage. Nominally 24VDC

PV – Graphic display

A graphic display of the sensor concentration reading may also be displayed in this screen. The graph will be a graphic display of concentration verses time.

9.4.1.2 Identification

The Identification screen contains 4 sections that provide some basic HART information as well as some additional sensor information. None of these variables are able to be changed in this screen, although some of these variables may be changed elsewhere.

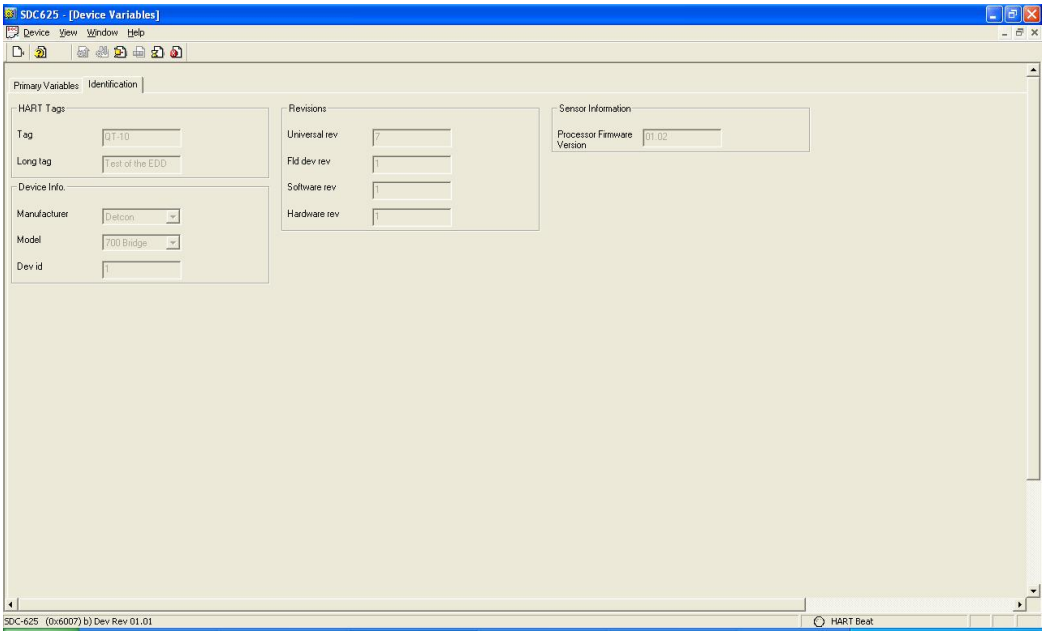

Figure 91 Identification

HART Tags

- Tag – Text that is associated with the field device installation. This text can be used by the user in any way. A recommended use is a unique label that correlates to a field device label: a plant drawing, or on a control system. This variable is also used as a type of data link layer address handle.
- Long Tag – Functions exactly like the Tag except the size is larger (max 32 ISO Latin 1 characters).

Device Info.

- Manufacturer – Device manufacturer – "Detcon"
- Model – Device model – "700 Bridge"
- Dev id – Field Device Identification – Uniquely identifies the field device when combined with the Manufacturer and Model. This variable cannot be modified by the user. Normally "1".

Revisions

- Universal rev – Revision of the HART Communication Protocol (currently revision 7)
- Fld dev rev – Revision of the Field Device Specific Device Description
- Software rev – Revision of the software embedded in the HRT Bridge PCA
- Hardware rev – Revision of the hardware in the HRT Bridge PCA.

Sensor Information

- Processor Firmware Version – Version of the firmware currently loaded in the Model 700 sensor.

9.4.2 Diagnostics Menu

The Diagnostics Menu contains two screens; 1) Device Status and 2) Channel Status. Both screens consist of a list of possible device error or status conditions. Next to each status condition is a small icon .that will be either green to display the normal status, or red to indicate an abnormal, changed, or a malfunction condition.

9.4.2.1 Device Status

Device Status contains one screen that shows the status of the sensor and the HRT Bridge PCA. The left side of the screen (Device Status) displays the status of the HRT Bridge PCA, with icons that will display either green to indicate normal condition, or red to indicate an error, a change, or a malfunction.

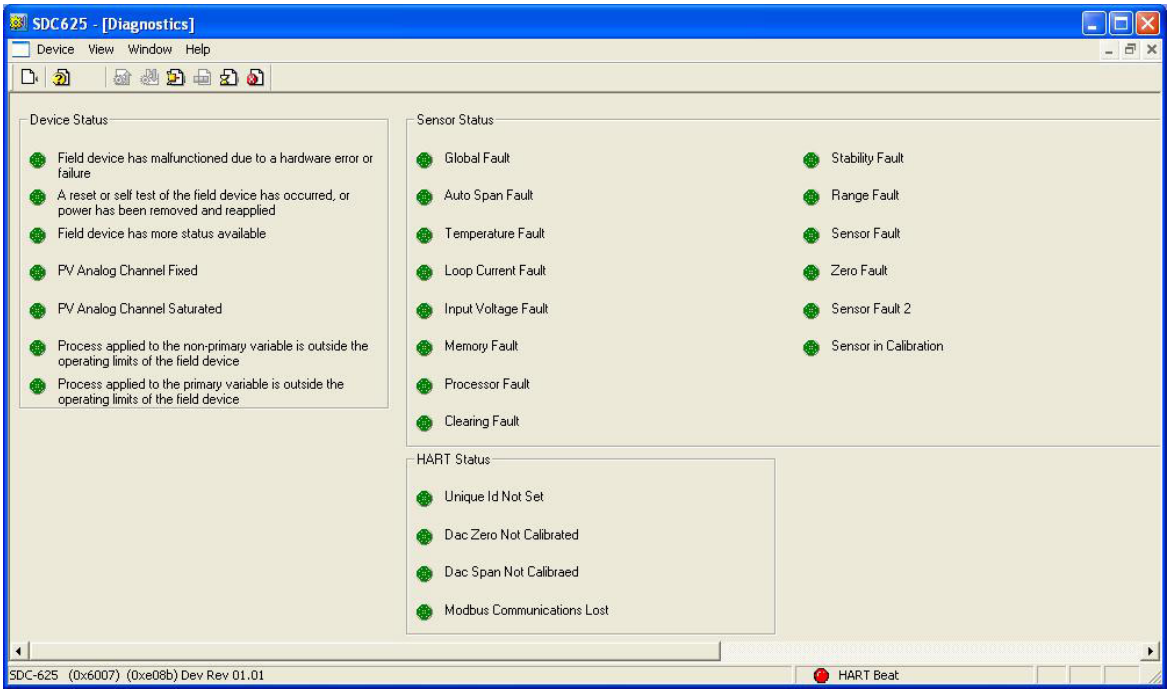

Figure 92 Device Status Screen

- Field device has malfunctioned due to a hardware error or failure
- A reset or self test of the field device has occurred, or power has been removed and reapplied
- Field device has more status available
- PV analog channel fixed
- PV analog channel saturated
- Process applied to the non-primary variable is outside the operating limits of the field device
- Process applied to the primary variable is outside the operating limits of the field device

9.4.2.2 Sensor Status

The Sensor Status section of the screen shows the status of the Model 700 sensor. Icons are used to display the status of the sensor and display either green to indicate normal condition or red to indicate an error, a change, or a malfunction.

- Global Fault – The Model 700 sensor has one or more faults.
- Auto span fault – 180 days or more has elapsed since the last successful AutoSpan
- Temperature fault – the detector is currently reporting an ambient temperature that is outside of the –40C to +75C range
- Loop current fault – The sensor has detected a condition where the 4-20mA output loop is not functional
- Input voltage fault – The sensor is currently receiving an input voltage that is outside of the 11.5-28VDC range
- Memory fault – The detector has a failure in saving new data to memory
- Processor fault – The detector has an unrecoverable run-time error
- Clearing Fault – The sensor reading failed to clear after removal of span gas during an AutoSpan sequence
- Stability Fault – The sensor reading failed to attain a stable reading when span gas was applied during an AutoSpan sequence
- Range Fault – Sensor fails the minimum signal change criteria during an AutoSpan sequence
- Sensor fault – The sensor cell has failed
- Zero Fault – the sensor drifts below –10% of full range
- Sensor Fault 2 – heater fault (TP-700), bridge fault (FP-700), or missing cell (DM-700). This status is not used by the IR-700 or PI-700.
- Sensor in Calibration – The sensor is currently being calibrated

9.4.2.3 HART Status

The HART status section of the screen shows the status of the HART interface on the HRT Bridge PCA. Icons next to each error description indicate if an error has occurred. A green icon indicates the error condition is not present and a red icon indicates an error has occurred.

- Unique ID Not Set – The unique device ID for the HRT Bridge PCA has not been set. This ID is set at the Detcon factory prior to shipping. If this error occurs, please contact Detcon technical support.
- DAC Zero Not Calibrated – The 4mA output of the HRT Bridge PCA has not been calibrated. Please see Section 9.4.3.2 for calibration instructions
- DAC Span Not Calibrated – The 20mA output of the HRT Bridge PCA has not been calibrated. Please see Section 9.4.3.2 for calibration instructions
- Modbus Communications Lost – The Model 700 sensor has failed to respond to more than 3 Modbus poll requests. This error condition can be reset using the “Reset Comm Lost Status” button that appears when this error condition occurs

9.4.3 Device Setup Menu

The Device Status Menu consists of three sub menus that allow parameters within the HRT Bridge PCA, and within the sensor to be changed or modified, and allows calibration of the sensor.

9.4.3.1 Configuration Setup

The Configuration Screen displays the configuration of the Model 700 sensor. There are no fields that can be changed on this screen, these fields are read directly from the Model 700 sensor.

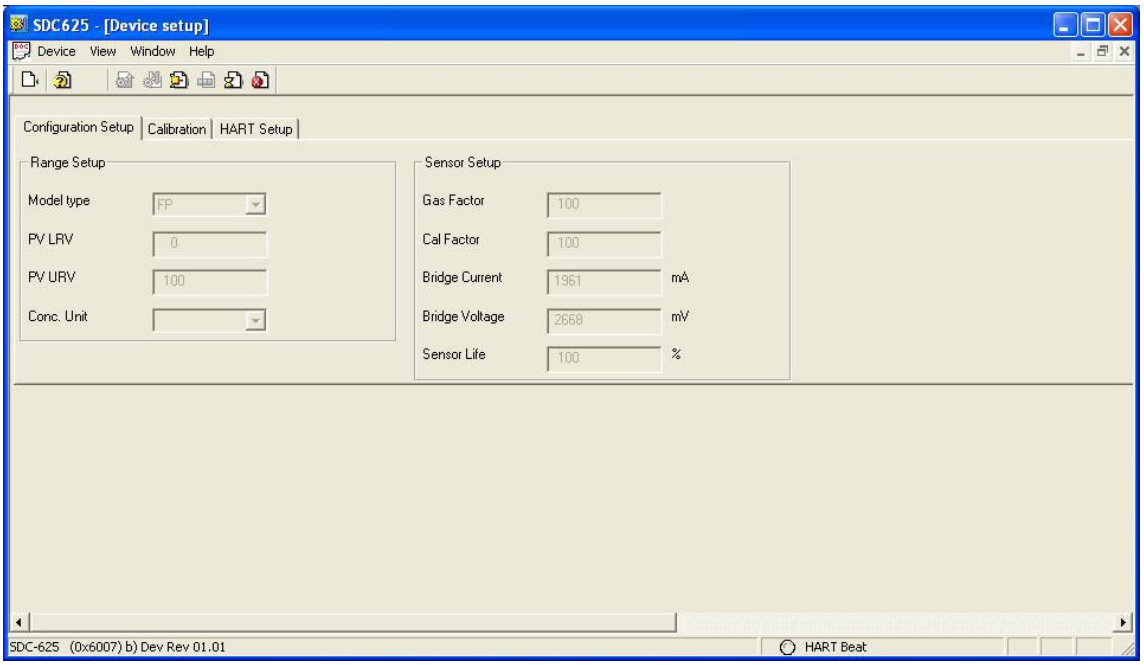

Figure 93 FP Configuration Setup

This screen will vary depending on the type of Model 700 sensor attached to the HRT Bridge. The Range Set up will display the Model Type of the sensor, followed by the PV LRV (Primary Variable Lower Range Value) and the PV URV (Primary Variable Upper Range Value), and the Conc Units (Concentration Units), the display may also show the Sensor Range. The Sensor Setup portion of the screen will display sensor specific parameters:

DM

- Sensor Range
- Cell Bias
- Gain Code
- Raw Counts
- Sensor Life

FP

- Gas Factor
- Cal Factor
- Bridge Current
- Bridge Voltage
- Sensor Life

IR

- Gas Factor
- Active Counts
- Reference Counts
- Range Multiplier
- Sensor Life

PI

- Sensor Range
- Gain Code
- Raw Counts
- Zero Offset
- Sensor Life

TP

- Heater Power
- Heater Voltage
- Sensor Resistance
- Heater Current
- Sensor Life

Note: The values above are read when the HRT Bridge boots up and are not updated in real-time.

9.4.3.2 Calibration

The Calibration screen displays the days since the last calibration, and the auto span level. This screen also allows the user to calibrate the sensor by performing an Auto Zero Calibration and an Auto Span Calibration. Calibration of the sensor using this feature also notifies the Host that the sensor is in calibration mode.

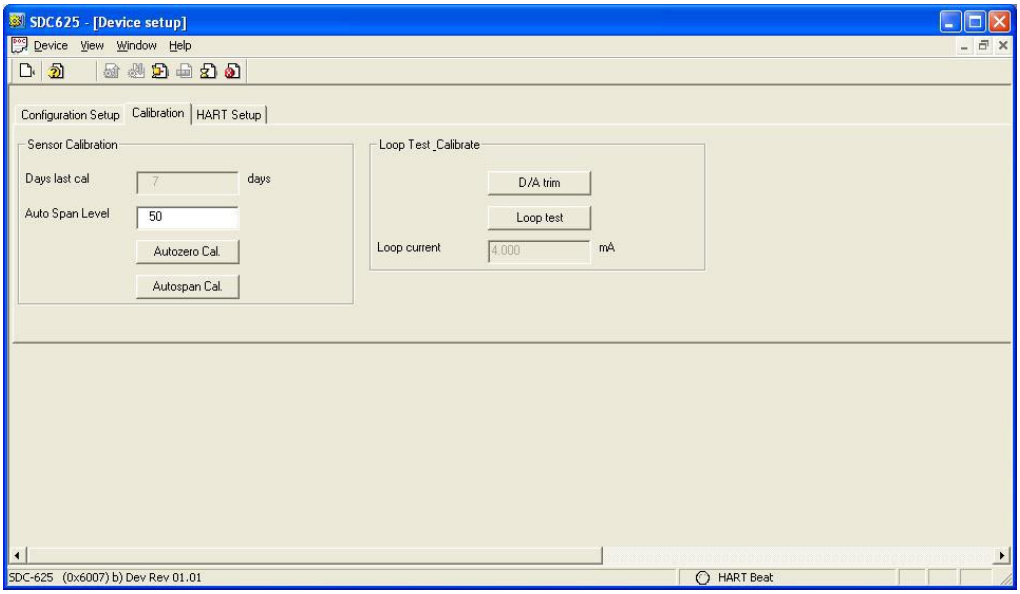

Figure 94 FP Calibration Screen

9.4.3.3 Sensor Calibration using the HRT Bridge

Calibration of a sensor using the HRT Bridge follows the same principle as calibrating the sensor via the magnetic interface. Since most of the calibration information can be found in the associated sensors manual, it is important to have the sensor manual on hand when performing sensor calibration.

Each sensor type has different criteria that need to be met before calibration of the sensor should be performed. Refer to the appropriate sensor manual for specific information on gas to be used, flow rates, interference gas, cross calibration gas, and other sensor specific criteria.

NOTE: The TP sensor does not perform an Auto Zero function. Although the menu may provide this option, the test is invalid, and is not performed.

Auto Zero

Auto Zero function is used to zero the sensor. Local ambient air can be used to zero most sensors as long as there are no traces of target or interference gases. If this cannot be confirmed, then a zero air or N_2 should be used. N_2 *must* be used for zero calibration of O_2 deficiency sensors.

Material Requirements:

- Handheld Communicator or PC and interface for HRT Bridge.
- Detcon PN 613-120000-700 Model 700 Splash Guard with integral Cal Port. -OR-
  Detcon PN 943-000006-132 Threaded Calibration Adapter
- Detcon PN 942-001123-000 Zero Air cal gas (or use ambient air if no target gas is present).
- Detcon P/N 942-640023-100 Nitrogen 99.99%

NOTE: Refer to appropriate sensor manual for the specific information on zero gas.
For DM, IR, and PI sensors, the zero gas source may be zero air or N_2, but must be pure N_2 (99.99%) for O_2 deficiency sensors.
For FP sensors, zero air should be used. Zero Air should have a normal background of 20.89% O_2. Pure Nitrogen (N_2) should not be used or errors may result.

Auto Zero consists of entering "Autozero Cal" and following the menu-displayed instructions.

1. If applicable install the Calibration Adapter or Splash Guard Adapter with integral Cal Port.
2. If applicable connect zero gas to the cal port.
3. Select "Autozero Cal" from the Sensor Calibration section of the screen.
4. Upon entering Auto Zero Calibration the procedure will prompt to begin Auto Zero Calibration. If zero gas is to be applied to the sensor, apply the gas.

NOTE: Upon entering calibration the 4-20mA signal drops to 2mA and is held at this level until the program returns to normal operation.

5. The procedure will prompt to verify that no gas is present, and the sensor will perform Auto Zero.

NOTE: The sensor will scroll "**Zero Cal . . . Setting Zero . . . Zero Saved**" twice.

6. After successfully setting Zero Cal the sensor and the HART Interface will return to Automatic Mode.
7. Remove the zero gas and calibration adapter if applicable.

Auto Span

The Auto Span function is used to calibrate the sensor. Unless otherwise specified by the associated sensor manual, span calibration is recommended at 50% of range.

Material Requirements:

- Handheld Communicator or PC and interface for HRT Bridge.
- Detcon PN 613-120000-700 Model 700 Splash Guard with integral Cal Port. -OR-
  Detcon PN 943-000006-132 Threaded Calibration Adapter
- Detcon Span Gas (See Detcon for Ordering Information). Recommended span gas is 50% of range with target gas. Other suitable span gas sources containing the target gas in air or N_2 balance may be acceptable.

NOTE: Refer to the appropriate sensor manual for information regarding Span Gas, flow rates, cross interference, or other sensor specific criteria.

Auto Span consists of entering "Autospan Cal" and following the display. The procedure will ask for the application of span gas. The applied gas concentration must be equal to the Autospan gas level setting. The factory default setting and recommendation for span gas concentration is normally 50% of range. If a span gas containing the recommended concentration is not available, other concentrations may be used as long as they fall between 5% and 100% of range. However, any alternate span gas concentration value must be set in the "**Auto Span Level**" field before proceeding with "Autospan cal".

CAUTION: Verification that the calibration gas level setting matches the calibration span gas concentration is required before executing "Autospan Cal". These two numbers must be equal. Refer to the appropriate sensor manual for more information.

1. If applicable install the Calibration Adapter or Splash Guard Adapter with integral Cal Port.
2. Verify that the Auto Span Level is equal to the calibration span gas concentration. If the Auto Span Level is not equal to the Calibration span gas concentration, adjust the Auto Span Level.
3. Connect the Cal Gas to the sensor, but do not apply the gas.
4. Select "Autospan Cal" from the Sensor Calibration section of the screen.

NOTE: Upon entering calibration the 4-20mA signal drops to 2mA and is held at this level until the program returns to normal operation.

5. Upon entering the procedure the procedure will prompt to begin Auto Span Calibration.
6. The procedure will prompt to apply span gas. Apply span gas from the attached cal gas cylinder and respond to the prompt.

NOTE: The sensor reading will respond to the gas and will switch to displaying a flashing "**XX**".

NOTE: Assuming acceptable sensor signal change, after 1 minute the reading will auto-adjust to the programmed Auto Span level. During the next 30 seconds, the Auto Span sequence checks the sensor for acceptable reading stability. If the sensor fails the stability check, the reading is re-adjusted back to the Auto Span level and the cycle repeats until the stability check is passed. Up to three additional 30-second stability check periods are allowed before the unit reports a "**Stability Fault**" twice and the sensor will return to normal operation, aborting the Auto Span sequence. The sensor will continue to report a "**Stability Fault**" and will not clear the fault until a successful Auto Span is completed.

NOTE: If the sensor passes the stability check, the sensor reports a series of messages:
"**Span OK**"

"**Sensor Life XXX%"**
"**Remove Span Gas**"

NOTE: When calibrating O2 deficiency sensors, there is no requirement to clear to <5% of range. The sensor will return to normal operation immediately after span adjustment.

7. When the sensor passes calibration the procedure will prompt to remove the span gas. Unsuccessful completion of the span calibration will create a Global Fault, and "Autospan Cal" will be aborted with a change to the HART Sensor Status (refer to section 9.4.2.2).
8. After successfully setting span cal the sensor and the HART Interface will return to Automatic Mode.
9. The Auto Span Calibration is complete
10. Remove the cal gas and calibration adapter if applicable.

NOTE 1: If the sensor fails the minimum signal change criteria, a **"Range Fault"** will be declared and a "**Fault Detected**" message will be displayed alternately on the sensor with the current reading. The HART Sensor Status will change to reflect a Range Fault.

NOTE 2: If the sensor fails the stability criteria, a **"Stability Fault"** will be declared and a "**Fault Detected**" message will be displayed alternately on the sensor with the current reading. The HART Sensor Status will change to reflect a Sensor Fault.

NOTE 3: If the sensor fails the clearing time criteria, a "**Clearing Fault**" will be declared and a **"Fault Detected**" message will be displayed alternately on the sensor with the current reading. The HART Sensor Status will change to reflect a Clearing Fault.

9.4.3.4 Loop Test Calibrate

The Calibration Screen contains a Loop Test Calibration section. This section displays the loop current reading and allows the user to perform D/A trim and Loop Test. D/A trim is used to calibrate the 4mA and 20mA set points in the Digital/Analog converter. Loop test allows the user to set the mA output to any level within range; this can be a good troubleshooting tool for line degradation. A DVM capable of reading milliamps and a 100~250 Ohm resistor are required to perform D/A trim and/or Loop test.

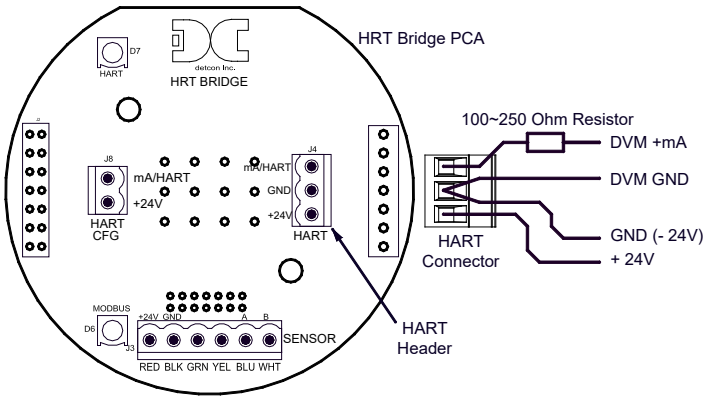

Figure 95 DVM Connection

D/A Trim

1) Select “D/A trim” from the Loop test Calibrate section of the screen.
2) The procedure will prompt to connect a meter: (Refer to Figure 95.)
   a) Disconnect the wire from the HART Connectors mA/HART position.
   b) Connect one end of a 100~250Ohm resistor to the mA/HART position of the HART Connector.
   c) Connect the positive lead of a DVM set to measure milliamps to the other end of the resistor.
   d) Connect the negative lead (-) of the DVM to the GND position of the connector.
3) The procedure will set the output to 4ma, and prompt for the DVM Reading. Input the reading and select “OK”.
4) The HRT Bridge will readjust the output for 4mA, and inquire if the reading is 4mA on the DVM (select “YES” or “NO”).
5) If the reading on the DVM is 4mA, select “YES” and “OK” and the HRT Bridge will continue on to 20mA. If the reading is not 4mA, select “NO” and “OK” and the procedure will re-run the 4mA calibration (Step 3).
6) The procedure will set the output to 20mA, and prompt for the DVM Reading. Input the reading and select “OK”.
7) The HRT Bridge will readjust the output for 20mA, and inquire if the reading is 20mA on the DVM (select “YES” or “NO”).
8) If the reading on the DVM is 20mA, Select “YES” and “OK”. If the reading is not 20mA, select “NO” and “OK” and the procedure will re-run the 20mA calibration (Step 6).
9) When both the 4mA and the 20mA have been calibrated the procedure will return the HRT Bridge to automatic control.

Loop Test

1) Ensure that the DVM is connected as prescribed in Figure 95:
   a) Disconnect the wire from the HART Connectors mA/HART position.
   b) Connect one end of a 100~250Ohm resistor to the mA/HART position of the HART Connector.
   c) Connect the positive lead of a DVM set to measure milliamps to the other end of the resistor.
   d) Connect the negative lead (-) of the DVM to the GND position of the connector. (Figure 95)
2) Select “Loop test” from the Loop test Calibrate section of the screen.
3) The procedure will prompt for a setting (“4mA”, “20mA”, “Other”, and “End”).
4) Select one of the settings or “End” to exit.
5) If “Other” is selected, the procedure will prompt for a value. Only valid values will be accepted.
6) Select “OK”.
7) The HRT Bridge will set the output for selected milliamp value.
8) Compare the reading on the DVM to the output displayed. Select “OK” when ready to continue
9) The procedure will return to Step 3. If “End” is selected, the HRT Bridge will exit Loop test and return to automatic control.

9.4.3.5 HART Setup

The HART Setup Screen allows parameters of the HRT Bridge to be changed or modified. Changes made on this screen will not be applied until power is cycled on the unit.

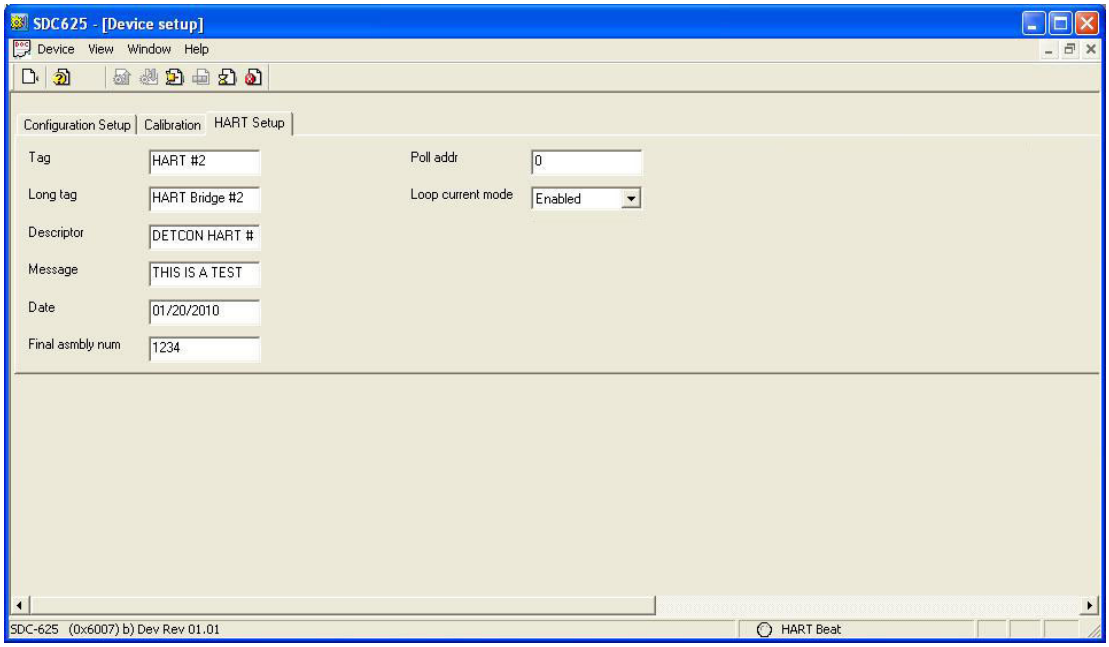

Figure 96 HART Setup

- Tag – Text that is associated with the field device installation. This text can be used by the user in any way. A recommended use is a unique label that correlates to a field device label: a plant drawing, or on a control system. This variable is also used as a type of data link layer address handle.
- Long Tag – Functions exactly like the Tag except the size is larger (max 32 ISO Latin 1 characters).
- Descriptor – Text that is associated with the field device. This text can be used by the user in any way. There is no specific recommended use.
- Message – Text that is associated with the field device. This text can be used by the user in any way. There is no specific recommended use.
- Date – Gregorian calendar date that is stored in the field device. This can be used by the user in any way. There is no specific recommended use. Note: This field is not updated by the HRT Bridge and does not indicate the current date.
- Final asmbly num – Number that is used for identification purposes, and is associated with the overall field device.
- Poll addr – This number is the address of the HRT Bridge on a network and must be set to 0.

9.5 Specifications

Inputs

Any Model 700 Gas Sensor

See specific Model 700 Gas Sensor manual for specifications

Input Power

9 to 30VDC (Nominal 24VDC)

Power Consumption (excluding 700 Gas Sensor)

< 0.4 Watts at 24VDC (Normal)

< 0.8 Watts at 30VDC (Maximum)

Ambient Temperature

-40°C to +70° C (FP, TP, and IR-700A), -40°C to +55° C (DM-700A), -20°C to +55° C (PI-700A)

Humidity: 10 to 95% Non-condensing

Outputs

Analog 4-20mA DC

HART® Communication Protocol

HART® Version

7.0

Manufacturer ID

0x6007

Device ID

0xE08B

Warranty

One year

Five year fixed fee service policy

9.6 Warranty

All warranties are FOB the Detcon factory. Should any product fail to perform in accordance with published specifications within the warranty period, return it freight pre-paid to Teledyne Detcon Inc., 4055 Technology Forest Blvd, Suite 100, The Woodlands, Texas 77381 for necessary repairs.

Teledyne Detcon Inc., as manufacturer, warrants each new HRT Bridge PCA to be free from defects in material and workmanship under intended normal use for a period of one year. The warranty period begins on the date of shipment to the original purchaser and ends one year thereafter.

10. Model HART-RAM Module

Remote Sensor/Alarm Relay Module
With HART Interface
For use with Model 700 series sensors

TELEDYNE DETCON

TELEDYNE DETCON, Inc.
4055 Technology Forest Blvd.,
The Woodlands, Texas 77381
Phone 713.559.9200

WWW.TELEDYNEGASANDFLAMEDETECTION.COM

10.1 Introduction

10.1.1 Description

The Model 700 Remote Sensor/Alarm Relay Module with HART Interface (known as the HART Remote Alarm Module or HART-RAM) is sold separately as an accessory for Model 700 Series Gas Sensors. It is a universal design and can be used with any of the Model 700 Gas Sensors. The HART-RAM is provided in an explosion-proof junction box constructed of either epoxy-painted aluminum or 316 stainless steel and includes a glass-viewing window.

Figure 97 700 HART-RAM

The HART-RAM performs three functions:

1) The first function is to set gas alarm levels and to configure the three local relay contacts.

2) The second function is to provide a HART Interface to the Model 700 Gas Sensor

3) The third function is to operate a Model 700 Gas Sensor remotely.

The remote sensor function is typically used when the sensor must be mounted in a position where it cannot be viewed or accessed readily. All three functions can be used at the same time.

10.1.2 Installation

The HART-RAM can be installed as a wall mount or pipe mount using the mounting holes of the explosion-proof junction box. It should be oriented such that the LED display is horizontal. If the 700 Gas Sensor is mounted directly to the HART-RAM, use 0.5" spacers underneath the mounting holes to provide access clearance for the 700 Gas Sensor (Figure 98).

NOTE: Block any unused ¾" NPT holes with the proper Plug. (Detcon P/N 8522-750)

NOTE: Install only where the ambient temperature at place of installation is within the rated temperature limits of this device (-40ºC to +70ºC).

NOTE: All devices connecting to the ¾" NPT conduit entries should be tightened to a minimum of 16 Foot-Pounds torque.

NOTE: The flamepath joints are not intended to be repaired if damaged.

NOTE: For ATEX use, cable glands, adapters, and/or blanking elements shall be ATEX certified to Ex d IIC and shall be installed.

WARNING: Cables and cable glands must be rated for ≥90°C.

NOTE: Use internal and external grounding points as required or recommended by electrical installation guidelines. Tighten to full hand-tight or 12 Foot-Lbs torque.

NOTE: Connect earth wire to crimped terminal (≥4mm^2) (Internal and external ground points)

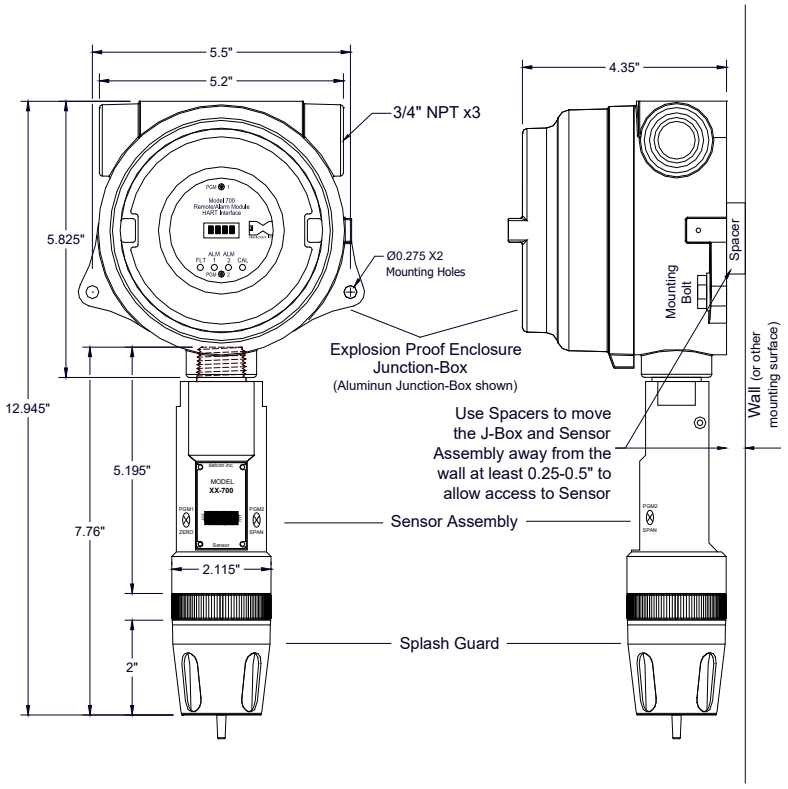

Figure 98 Mounting HART-RAM with 700 Sensor

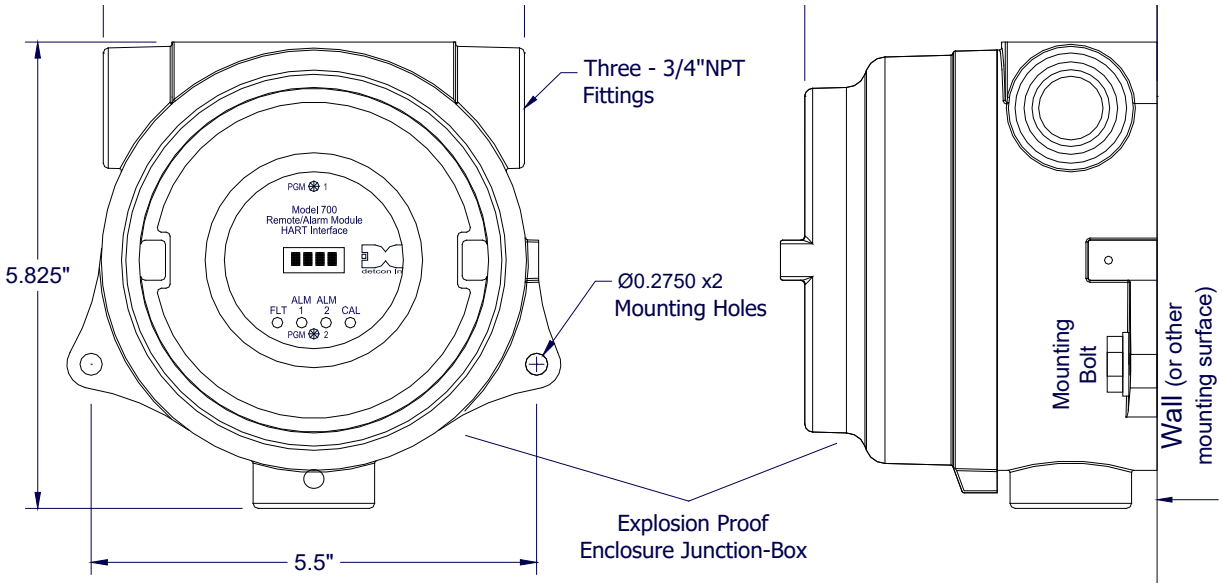

Figure 99 HART-RAM Mounting

The HART-RAM Electronics package consists of three printed circuit assemblies (PCAs). The top two PCAs (RAM display and HART Bridge) are accessed by removing the junction box cover and using the brass pull knobs to pull the package directly out of the enclosure. The bottom PCA (terminal board) will remain attached to the bottom of the junction box via two machine screws allowing the RAM display and HART Bridge to unseat from the 12-pin plug-in connector and providing access to the terminal board connectors (Figure 101). To install the electronics package, properly align the plug-in connector and gently push the HART-RAM in until it is fully seated to the bottom PCA. The HART-RAM faceplate will be even with the top of the junction box when installed properly. The HART-RAM top should be flush with the top of the enclosure before screwing down the junction box cover.

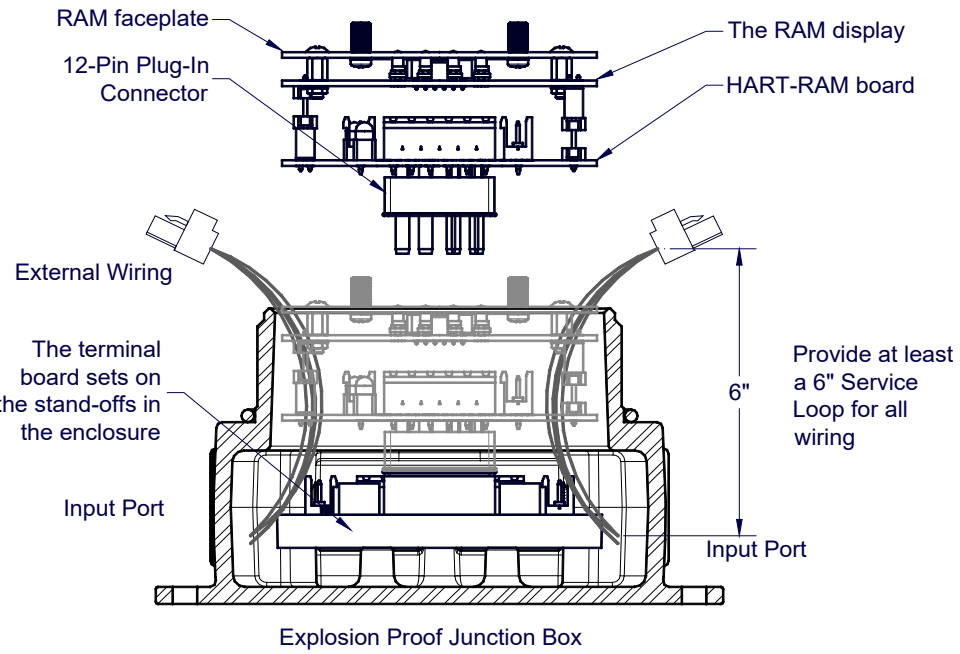

Figure 100 Exploded View of Assembly

10.1.3 Field Wiring

The field wiring connections are made to the bottom PCA (terminal board) of the HART-RAM using a series of connector blocks. There is a 6-pin terminal block for connection to the 700 Gas Sensor (labeled SENSOR), a 9-pin terminal block for connection to the 3 relay contacts (labeled RELAY OUTPUT), a 6-pin terminal block for connection of power, mA/HART output and Modbus™ interface to the host device (labeled IN) and a 6-pin terminal block for connection of power and Modbus™ interface to an additional device (labeled OUT).

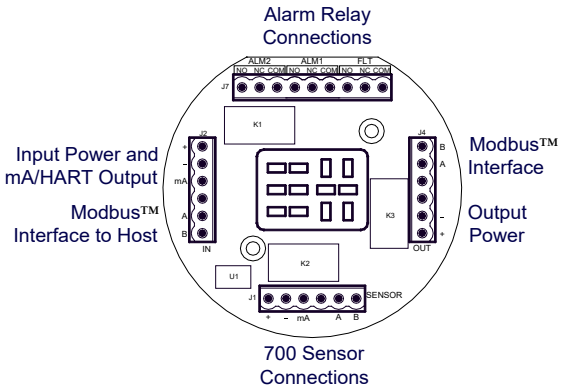

Figure 101 Interface connections on terminal board

NOTE: The connectors on the HART Bridge are not to be used.

The user will typically connect the 700 Gas Sensor directly to the HART-RAM if there is no requirement for remote sensor separation (Figure 102). In this case, the 700 sensor will not require its own junction box and it is not necessary to install/use the transient protection module shipped with the 700 sensor. The 700 sensor may arrive from the factory pre-assembled with the HART-RAM in the j-box, but only if it is ordered in this configuration. In this configuration, the wires from the 700 sensor will be directly connected to the 6-pin terminal block labeled “SENSOR” on the terminal board.

NOTE: If the 700 sensor and HART-RAM are directly connected, it is not necessary to install/use the transient protection module that is shipped with every 700 Gas Sensor.

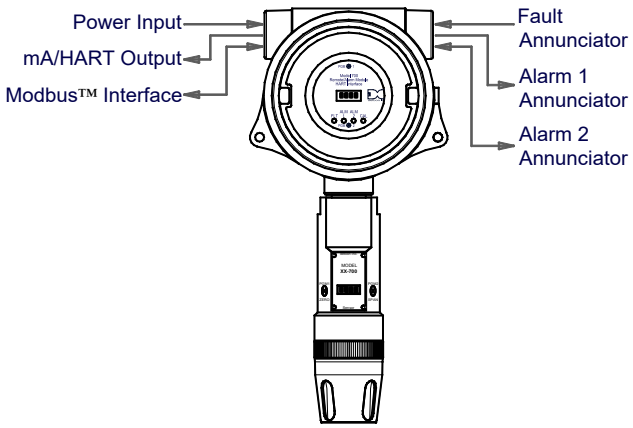

Figure 102 Installation with 700 Gas Sensor

If remote sensor separation is required, the HART-RAM will be separated from the 700 sensor. Remote separation distances of up to 1000 feet are possible with the recommended cables.

NOTE: It is highly recommended to install the interconnecting cabling inside rigid metal conduit to eliminate potential EMI and RFI interference.

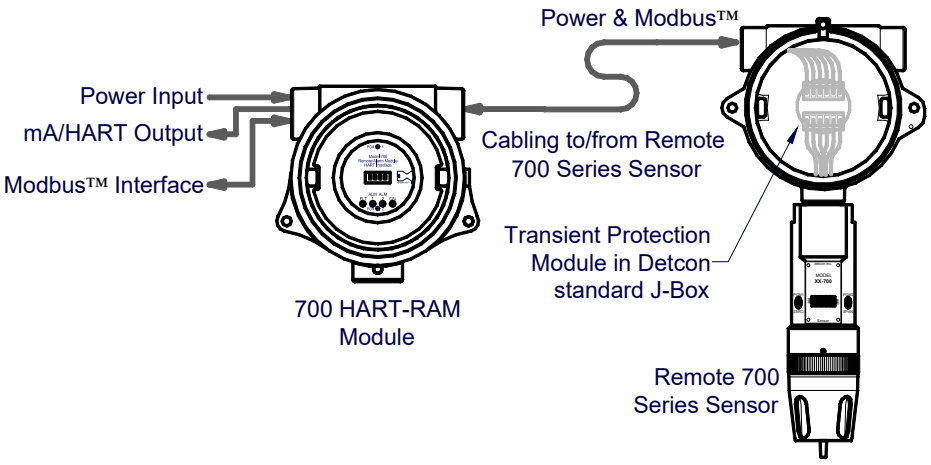

Figure 103 Remote 700 Gas Sensor with HART-RAM

The recommended cable for remote sensor separation is Belden 1502P (18AWG unshielded pair for power and 22AWG shielded twisted pair for serial Modbus™ communications). The mA signal return is not required.

NOTE: Only the 2-wire power cable (mA signal return is not required) and the 2-wire Modbus™ serial communications cable are required when remote wiring between the HART-RAM and the 700 Gas Sensor.

NOTE: The same recommended cables should be used for the connection between a Modbus™ master control device and the HART-RAM. However, if only the 4-20mA/HART signal is being used by the master/host controller, then Belden 8770 is recommended.

10.2 Operator Interface

The operator interface of the HART-RAM is very similar to the Model 700 Gas Sensor. It uses the identical LED display, same programming magnet, and has the same magnetic programming switches (PGM1/ZERO and PGM2/SPAN). The main difference is that the 700 HART-RAM has LED indicators for the 3 relays (ALM1, ALM2 and FAULT) and a CAL LED to indicate when the 700 sensor is in calibration.

The gas reading, gas units, and fault status reported by the HART-RAM will mimic that of the 700 Gas Sensor.

NOTE: If the Model 700 Gas Sensor is directly connected to the HART-RAM and junction box, then the gas sensor operation should be exercised through the 700 Gas Sensor (and not the HART-RAM). This is the recommended practice since the HART-RAM contains only a limited number of sensor operational control functions. If the HART-RAM and 700 Gas Sensor are separated, then normal remote gas sensor operation should be exercised through the HART-RAM.

The operating interface is menu-driven via the two magnetic program switches located under the target marks on the HART-RAM faceplate. The two switches are referred to as “PGM1” and “PGM2”. The menu list consists of three major items that include sub-menus as indicated below. (Refer to the complete Software Flow Chart Figure 104)

Normal Operation

Current Reading and Fault Status

Calibration Mode

AutoZero (if applicable)
AutoSpan

Program Mode

View Sensor Status (representative of whichever Model 700 Gas Sensor is attached)
Set AutoSpan Level
Set Serial ID
Alarm 1 Settings
Alarm 2 Settings
Fault Settings
Signal Output Check

The user interface of the HART-RAM is designed to mimic that of the Model 700 Gas Sensor. However, only the functions deemed critical for normal remote sensor operation are available. These are the 5 menu functions that are available for the remote control of the 700 Gas Sensor:

AutoZero – used to perform AutoZero remotely
AutoSpan – used to perform AutoSpan remotely, user is required to apply span gas flow to remote gas sensor
View Program Status – displays the complete list of sensor status and diagnostic indicators
Set AutoSpan Level – used to change the span gas concentration
Signal Output Check – used to generate simulated outputs from the sensor for system diagnostic purposes

NOTE: For any other required operational changes, the 700 Gas Sensor must be accessed directly.

Software Flowchart

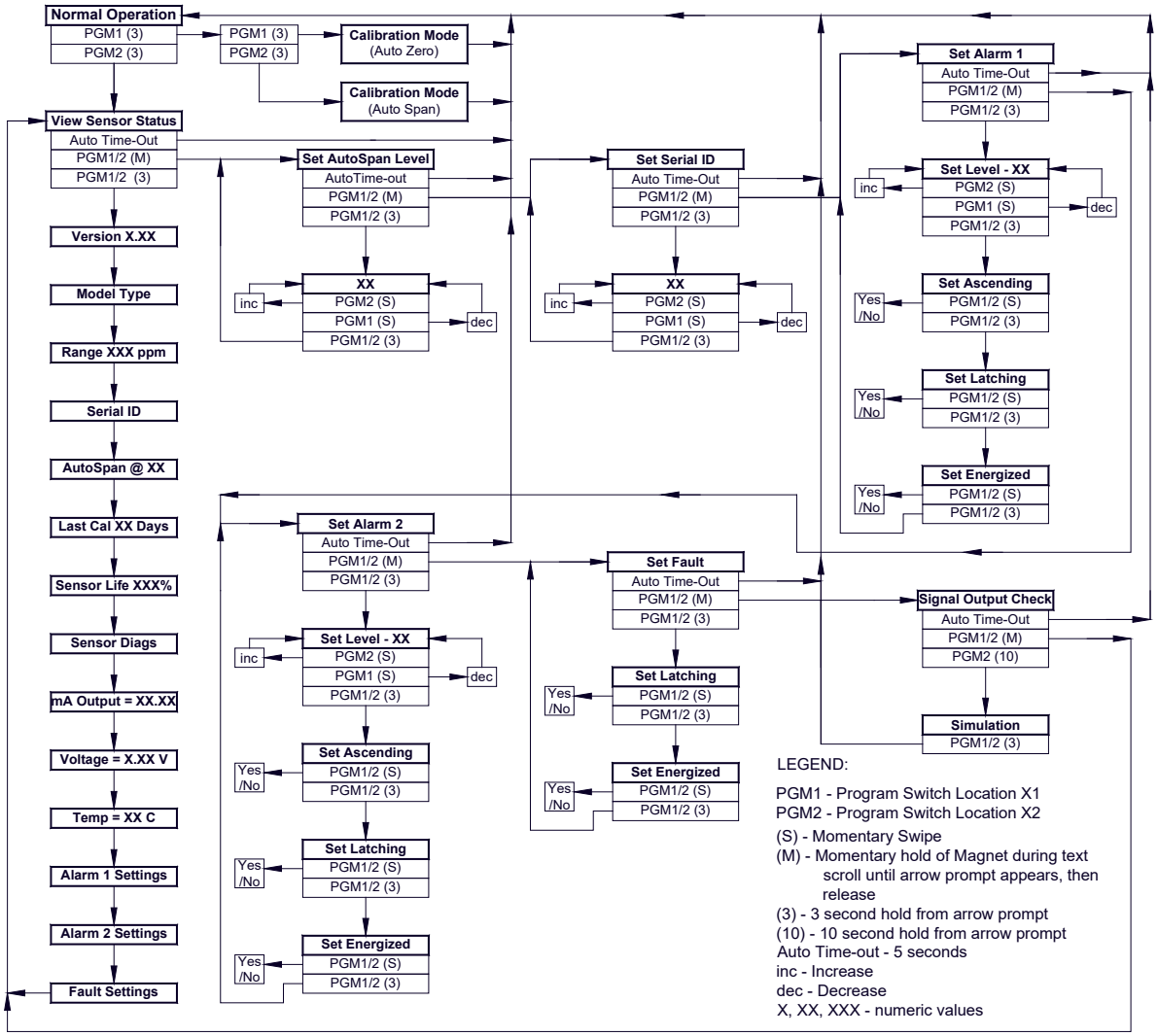

Figure 104 HART-RAM Software Flowchart

10.3 Set-up and Normal Operation

In normal operation, the HART-RAM display continuously shows the current sensor reading, which will typically appear as “0”. Once every 1 minute the LED display will flash the sensor’s measurement units and gas type (i.e. % LEL). If the 700 Gas Sensor or HART-RAM is actively experiencing any diagnostic faults, a “Fault Detected” message will flash on the display once every minute. When the unit is in “Fault Detected” mode with the red Fault LED on, PGM1 or PGM2 can be swiped to invoke a display of the active faults.

In normal operation, the 4-20mA current output from the HART-RAM corresponds with the present gas concentration and full-scale range. The HART interface output, which is on the same wire as the 4-20mA output, provides the current gas reading, fault status and other sensor status on a continuous basis when polled.

If the Modbus™ communication between the HART-RAM and the 700 Gas Sensor is not functioning the HART-RAM will display “**COMM**” and the ‘FLT’ LED will be illuminated.

NOTE: The 700 Gas Sensor must be set to Serial ID = 01 for proper communications set-up with the HART-RAM.

10.3.1 View Sensor Status

View Sensor Status displays all current configurational and operational parameters from the 700 Gas Sensor attached to it. These typically include sensor type, software version number, detection range, AutoSpan level, days since last AutoSpan, estimated remaining sensor life, sensor diagnostics, input voltage, 4-20mA output, and sensor ambient temperature.

To access the **View Sensor Status** menu, hold the magnet over PGM2 (⬇) until the arrow prompt appears and then hold continuously for 3 seconds. This will display the **View Sensor Status** text scroll. From the **View Sensor Status** text scroll, hold the magnet over PGM1 (⬆) or PGM2 (⬇) until the arrow prompt appears and then hold continuously for an additional 3 seconds. The display will scroll the complete list of sensor status parameters sequentially:

Current Software Version (of the HART-RAM)
Sensor Model Type
Range of Detection
Serial ID address
AutoSpan Level
Days From Last AutoSpan
Remaining Sensor Life
Sensor Diagnostics (varies by sensor type)
4-20mA Output
Input Voltage Supply
Operating Temperature
Alarm 1 Settings
Alarm 2 Settings
Fault Settings

When the sensor status list sequence is complete, the HART-RAM will revert to the “View Sensor Status” text scroll. The user can then choose to either: 1) review list again by executing another 3 second hold, 2) move to another menu item by executing a momentary hold, or 3) return to Normal Operation via 5 second automatic timeout.

10.3.2 Set AutoSpan Level

Set AutoSpan Level is used to set the span gas concentration level that is being used to calibrate the sensor. This level is adjustable from 10% to 100% of range. The current setting can be viewed in View Sensor Status.

The menu item appears as: "**Set AutoSpan Level**"

From the **Set AutoSpan Level** text scroll, hold the magnet over PGM1 (⬆) or PGM2 (⬇) until the arrow prompt appears and then hold continuously for an additional 3 seconds. The display will then switch to "XX"(where XX is the current gas level). Swipe the magnet momentarily over PGM2 to increase or PGM1 to decrease the AutoSpan Level until the correct level is displayed. Hold the magnet over PGM1 or PGM2 for 3 seconds to accept the new value. The display will scroll "AutoSpan Level Saved", and revert to "Set AutoSpan Level" text scroll.

The user can then choose to either: 1) move to another menu item by executing a momentary hold, or 2) return to Normal Operation via 5 second automatic timeout.

10.3.3 Set Serial ID

The HART-RAM can be polled via the Modbus™ interface. The HART-RAM Serial ID # should be set as a slave device to a master polling device. The Serial ID # of the HART-RAM is independent of the Serial ID # of the Model 700 Gas Sensor.

NOTE: The Serial ID # of the Model 700 Gas Sensor connected to the HART-RAM must be set to ID = 01 for proper communication between the two devices.

Set Serial ID is used to set the Modbus™ serial ID address of the HART-RAM. It is adjustable from 01 to 127 in hexadecimal format (01-7F hex). The current serial ID can be viewed in View Sensor Status using the instruction given in Section 10.3.1.

The menu item appears as: "**Set Serial ID**"

From the "**Set Serial ID"** text scroll, hold the programming magnet over PGM1 (⬆) or PGM2 (⬇) until the arrow prompt appears and then hold continuously for an additional 3 seconds. The display will then switch to "XX"(where XX is the current ID address). Swipe the magnet momentarily over PGM2 to increase or PGM1 to decrease the hexadecimal number until the desired ID is displayed. Hold the magnet over PGM1 or PGM2 for 3 seconds to accept the new value. The display will scroll "New ID Saved", and revert to "Set Serial ID" text scroll.

The user can then choose to either: 1) move to another menu item by executing a momentary hold, or 2) return to Normal Operation via 5 second automatic timeout.

10.3.4 Set-up for Relay Outputs

The user interface allows for the setting and configuration of the three relay contacts of the HART-RAM. The three relays can be optionally configured as follows:

Alarm 1: 1) gas level, 2) ascending/descending, 3) latching/non-latching and 4) energized/de-energized

Alarm 2: 1) gas level, 2) ascending/descending, 3) latching/non-latching and 4) energized/de-energized

Fault: 1) latching/non-latching and 2) energized/de-energized

The three menu items for relay output set-up are **Alarm1 Settings, Alarm2 Settings, and Fault Settings.** They are used to set the gas alarm levels and relay status for ascending/descending, latching/non-latching, and energized/de-energized**.** The gas concentration level for alarms can be set between 1-95% of the full-scale range of the 700 Gas Sensor. The current relay configurational settings can be viewed in View Sensor Status menu.

Ascending/Descending - In ascending mode, the alarm will trigger when the gas concentration detected is greater than or equal to the alarm set point. In descending mode, the alarm will trigger when the gas concentration detected is lesser than or equal to the alarm set point.

Latching/Non-Latching - In latching mode, the relay remains active when the alarm status has cleared. In non-latching mode, the relay is deactivated when the alarm status is cleared.

Energized/De-Energized - In energized mode, the normally open contact is closed if the alarm level has not been reached. In non-energized mode, the normally open contact is open if the alarm level has not been reached. Energized mode provides for fail-safe operation since a loss of power or cable failure will cause the contact to be open.

The menu item appears as: "**Alarm1 Settings**"

From the "**Alarm1 Settings**" text scroll, hold the magnet over PGM1 (⬆) or PGM2 (⬇) until the arrow prompt appears and then hold continuously for an additional 3 seconds. The display will switch to "**Set Level**" followed by **XX** (where XX is the current set-point level). Swipe the magnet momentarily over PGM2 to increase or PGM1 to decrease until the correct level is displayed. Hold the magnet over PGM1 or PGM2 for 3 seconds to accept the new value. The menu will then scroll "Saved".

The display will then scroll "**Set Ascending**" and show "**Yes**" or "**No**". Use a swipe of PGM1 to select choice (yes = ascending and no = descending). Use PGM1 for a 3 second hold to accept the selection. The menu will then scroll "Saved".

The display will then scroll "**Set Latching**" and then show "Yes" or "No". Use a swipe of PGM1 to select choice (yes = latching and no = non-latching). Use PGM1 for a 3 second hold to accept the selection. The menu will then scroll "Saved".

The display will then scroll "**Set Energized**" and then show "Yes" or "No". Use a swipe of PGM1 to select choice (yes = energized and no = non-energized). Then use PGM1 for a 3 second hold to accept the selection. The menu will then scroll "Saved".

At this point, configuration settings for Alarm1 are complete and the menu will shift back to "**Alarm1 Settings**". The user can then choose to either: 1) move to another menu item by executing a momentary hold at the end of the text scroll, or 2) return to Normal Operation via 5 second automatic timeout.

Follow the identical instructional sequence for the menu function "Alarm2 Settings". The menu function for "Fault Settings" is similar except that it does not have a selection for gas level and ascending/descending. It only has choice selections for latching/non-latching and energized/de-energized).

NOTE: The Fault relay is typically set-up as energized so that it will change states during an unexpected power loss.

NOTE: The relay contacts can be wired at the HART-RAM's connector PCA for either Normally Open or Normally Closed.

10.3.5 Signal Output Check

Signal Output Check provides a simulated 4-20mA output. The simulation allows the user to conveniently perform a functional system check of the entire safety system, and can be initiated at the HART-RAM. This signal output simulation aids in performing troubleshooting of signal wiring problems.

This menu item appears as: "**Signal Output Check**"
.

From the "Signal Output Check" text scroll, hold the magnet over PGM1 (⬆) or PGM2 (⬇) until the arrow prompt appears and then hold continuously for an additional 3 seconds. Once initiated, the display will continuously scroll "Simulation Active" until the function is stopped. During simulation mode, the 4-20mA value will be increased from 4.0mA to 20.0mA (in 1% of range increments at a 1 second update rate) and then decreased from 20.0mA to 4.0mA.

NOTE: Signal Output Check stays active indefinitely until the user stops the function. There is no automatic timeout for this feature.

To end simulation mode, hold magnet over PGM1 or PGM2 for 3 seconds. The display will revert to the "Signal Output Check" text scroll.

The user can then choose to either: 1) move to another menu item by executing a momentary hold, or 2) return to Normal Operation via 5 second automatic timeout.

10.4 HART Interface

The HART-RAM module provides an interface for a Model 700 gas sensor to a HART-enabled Network. HART technology is a master/slave protocol which allows a HART Master, such as a control system, to monitor the operation of the HART-RAM, and the Model 700 sensor attached to it. The HART-RAM functions as an intelligent HART Slave on the Network.

The HART-enabled host interfaces with the mA output of the HART-RAM which contains the HART signal. Power is provided through the 6-pin terminal block (labeled IN) located on the terminal board (Figure 105).

NOTE: The 4-20mA signal from the HART-RAM must be connected to a load resistor to operate properly. If this signal is not terminated properly, the HART-RAM and the HART Interface will fail to work properly. Normal termination is accomplished by connection to the host device, which will have the correct load to terminate the signal properly.

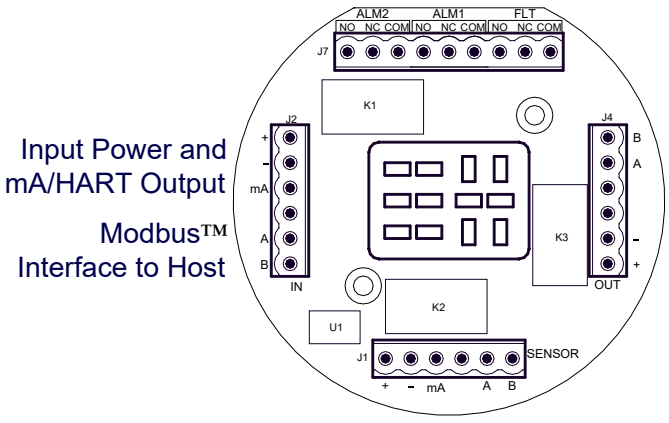

Figure 105 Hart Interface Connection

10.5 HART Operation

When power is applied to the HART-RAM with the Model 700 sensor attached, the HART interface will go through a boot up sequence that will last for approximately 30 seconds. During this time, the 4-20mA line will be held at 1mA. After the boot up sequence the HART interface will enter normal operation, and communication with the Host will begin. A red LED (D7) labeled “HART” on the HART Bridge PCA will illuminate when the PCA is communicating with the HART Host.

The 4-20mA signal from the HART-RAM must be connected to a load resistor for HART communication to operate properly. If this signal is not terminated properly, the HART-RAM and the HART Interface will fail to work. Normal termination for the 4-20mA signal is accomplished by connection to a Host device, which will have the correct load to terminate the signal properly.

If the HART-RAM senses a fault in the sensor, it will take the 4-20mA signal down to 1mA. This 1mA signal will signify to the Host that a sensor fault has occurred, and the Host should, in turn, flag an error with the associated sensor.

The HART-RAM communicates with the Model 700 sensor through the Modbus™. The HART-RAM reads the appropriate Modbus™ register and creates the 4-20mA signal from the register reading. This allows the HART-RAM complete control of the HART Communications. A red LED (D6) labeled “MODBUS” on the HART Bridge PCA will blink when communication with the sensor occurs.

The HART interface has the ability to take the sensor into calibration. If the sensor is taken into calibration via the HART interface, the HART Communication Protocol will inform the Host that the sensor is in calibration mode, and will not set a fault. The 4-20mA signal will be set at 2mA. Starting a calibration using the sensor interface and magnetic tool will also cause the 4-20mA to be set to 2mA.

10.6 HART Operator Interface

The HART-RAM provides the ability to interface with the sensor via the HART Interface. The HART interface Host can be a PC, a Laptop, or several handheld devices such as the Emerson 375 Field Communicator. Although the displays on each device may be different and the menu names may change, the information provided should be the same. The HART Interface consists of three basic Menus, each with a subset of menus or screens:

Device Variables Menu
- Primary Variables
- Identification

Diagnostics Menu
- Device Status
- Sensor Status

Device Status Menu
- Configuration Setup
- Calibration
- HART Setup

Note: The screen shots shown below are taken from the HART Communication Foundation SDC625 Reference Host. The user's screen appearance may be different depending on the HART host used.

10.6.1 Device Menu

10.6.1.1 Primary Variables

The primary Variable Screen contains the basic information from the sensor and is broken into four basic sections. None of these variables are changeable, and are directly read from the sensor.

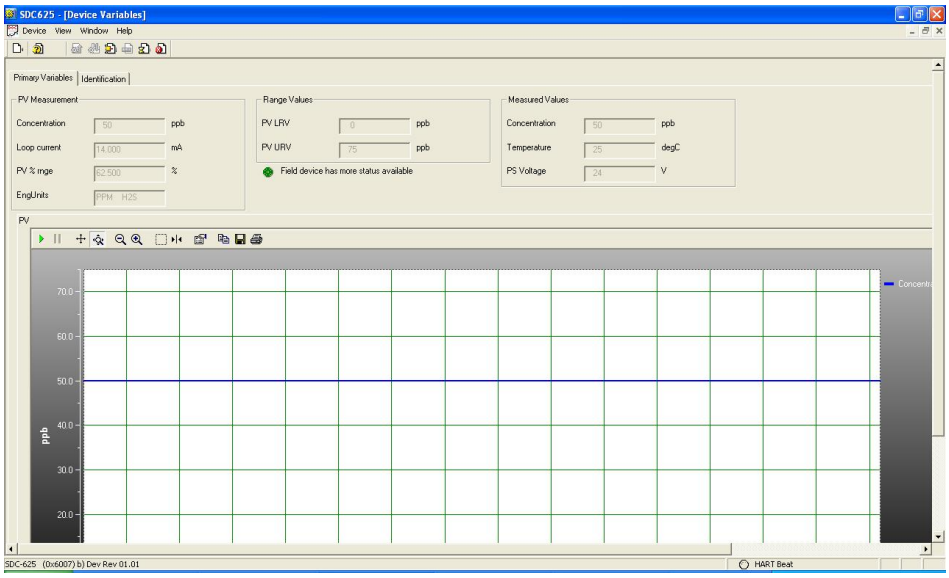

Figure 106 Primary Variables

Primary Variables

- Concentration – the value of the gas concentration measured by the sensor. The units of measurement (ppm, ppb, or %) are shown to the right of the concentration value. This is the HART primary variable.
- Loop Current – the value of the output 4-20mA loop current
- PV %rnge – Primary variable percent of range
- EngUnits – the measurement units and gas type

Range Variables

- PV LRV – Primary variable lower range value (normally 0 for most sensors)
- PV URV – Primary variable upper range value, or the range of the sensor (i.e. 100ppm, 10ppm, 5%, etc.)

Device Status

- Indicates the device has more status information available. If this icon is green, no additional status information is available. If it is red, refer to Section 9.4.2 for more information.

Measured Values

- Concentration – the value of the gas concentration measured by the sensor. The units of measurement (ppm, ppb, or %) are shown to the right of the concentration value
- Temperature – displayed in degrees Centigrade.
- PS Voltage – power supply voltage. Nominally 24VDC

PV – Graphic display

A graphic display of the sensor concentration reading may also be displayed in this screen. The graph will be a graphic display of concentration verses time.

10.6.1.2 Identification

The Identification screen contains 4 sections that provide some basic HART information as well as some additional sensor information. None of these variables are able to be changed in this screen, although some of these variables may be changed elsewhere.

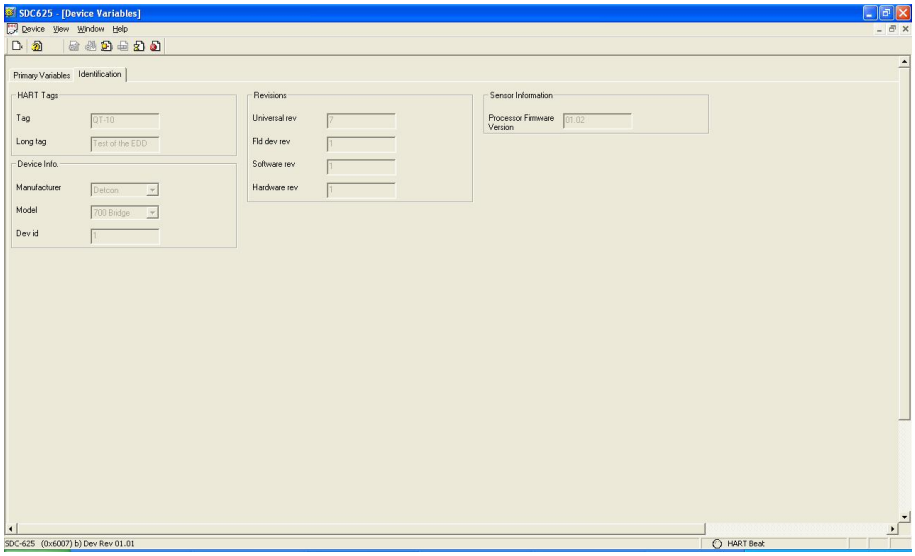

Figure 107 Identification

HART Tags

- Tag – Text that is associated with the field device installation. This text can be used by the user in any way. A recommended use is a unique label that correlates to a field device label: a plant drawing, or on a control system. This variable is also used as a type of data link layer address handle.
- Long Tag – Functions exactly like the Tag except the size is larger (max 32 ISO Latin 1 characters).

Device Info

- Manufacturer – Device manufacturer – "Detcon"
- Model – Device model – "700 Bridge"
- Dev id – Field Device Identification – Uniquely identifies the field device when combined with the Manufacturer and Model. This variable cannot be modified by the user. Normally "1".

Revisions

- Universal rev – Revision of the HART Communication Protocol (currently revision 7)
- Fld dev rev – Revision of the Field Device Specific Device Description
- Software rev – Revision of the software embedded in the HART-RAM
- Hardware rev – Revision of the hardware in the HART-RAM

Sensor Information

- Processor Firmware Version – Version of the firmware currently loaded in the Model 700 sensor.

10.6.2 Diagnostics Menu

The Diagnostics Menu contains two screens; 1) Device Status and 2) Channel Status. Both screens consist of a list of possible device error or status conditions. Next to each status condition is a small icon .that will be either green to display the normal status, or red to indicate an abnormal, changed, or a malfunction condition.

10.6.2.1 Device Status

Device Status contains one screen that shows the status of the sensor and the HART-RAM. The left side of the screen (Device Status) displays the status of the HART-RAM, with icons that will display either green to indicate normal condition, or red to indicate an error, a change, or a malfunction.

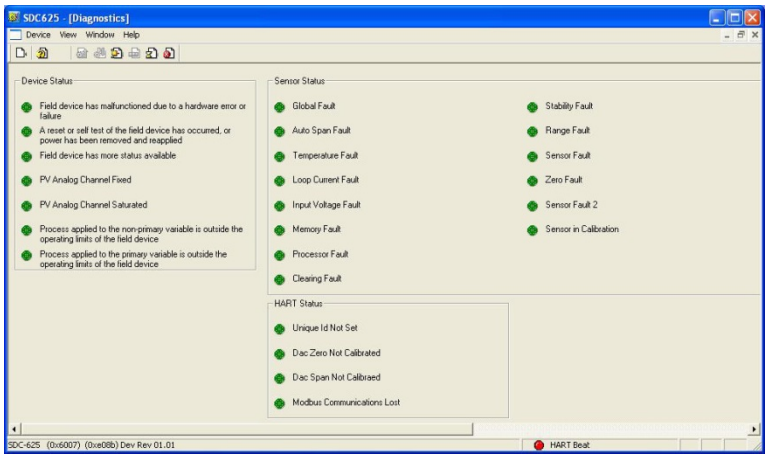

Figure 108 Device Status Screen

- Field device has malfunctioned due to a hardware error or failure
- A reset or self test of the field device has occurred, or power has been removed and reapplied
- Field device has more status available
- PV analog channel fixed
- PV analog channel saturated
- Process applied to the non-primary variable is outside the operating limits of the field device
- Process applied to the primary variable is outside the operating limits of the field device

10.6.2.2 Sensor Status

The Sensor Status section of the screen shows the status of the Model 700 sensor. Icons are used to display the status of the sensor and display either green to indicate normal condition or red to indicate an error, a change, or a malfunction.

- Global Fault – The Model 700 sensor has one or more faults.
- Auto span fault – 180 days or more has elapsed since the last successful AutoSpan
- Temperature fault – the detector is currently reporting an ambient temperature that is outside of the –40C to +75C range
- Loop current fault – The sensor has detected a condition where the 4-20mA output loop is not functional
- Input voltage fault – The sensor is currently receiving an input voltage that is outside of the 11.5-28VDC range
- Memory fault – The detector has a failure in saving new data to memory
- Processor fault – The detector has an unrecoverable run-time error
- Clearing Fault – The sensor reading failed to clear after removal of span gas during an AutoSpan sequence
- Stability Fault – The sensor reading failed to attain a stable reading when span gas was applied during an AutoSpan sequence
- Range Fault – Sensor fails the minimum signal change criteria during an AutoSpan sequence
- Sensor fault – The sensor cell has failed
- Zero Fault – the sensor drifts below –10% of full range
- Sensor Fault 2 – heater fault (TP-700), bridge fault (FP-700), or missing cell (DM-700). This status is not used by the IR-700 or PI-700.
- Sensor in Calibration – The sensor is currently being calibrated

10.6.2.3 HART Status

The HART status section of the screen shows the status of the HART interface on the HART-RAM. Icons next to each error description indicate if an error has occurred. A green icon indicates the error condition is not present and a red icon indicates an error has occurred.

- Unique ID Not Set – The unique device ID for the HART-RAM has not been set. This ID is set at the Detcon factory prior to shipping. If this error occurs, please contact Detcon technical support.
- DAC Zero Not Calibrated – The 4mA output of the HART-RAM has not been calibrated. Please see Section 10.6.3.2 for calibration instructions
- DAC Span Not Calibrated – The 20mA output of the HART-RAM has not been calibrated. Please see Section 10.6.3.2 for calibration instructions
- Modbus™ Communications Lost – The Model 700 sensor has failed to respond to more than 3 Modbus™ poll requests. This error condition can be reset using the “Reset Comm Lost Status” button that appears when this error condition occurs

10.6.3 Device Setup Menu

The Device Status Menu consists of three sub menus that allow parameters within the HART-RAM, and within the sensor to be changed or modified, and allows calibration of the sensor.

10.6.3.1 Configuration Setup

The Configuration Screen displays the configuration of the Model 700 sensor. There are no fields that can be changed on this screen; these fields are read directly from the Model 700 sensor.

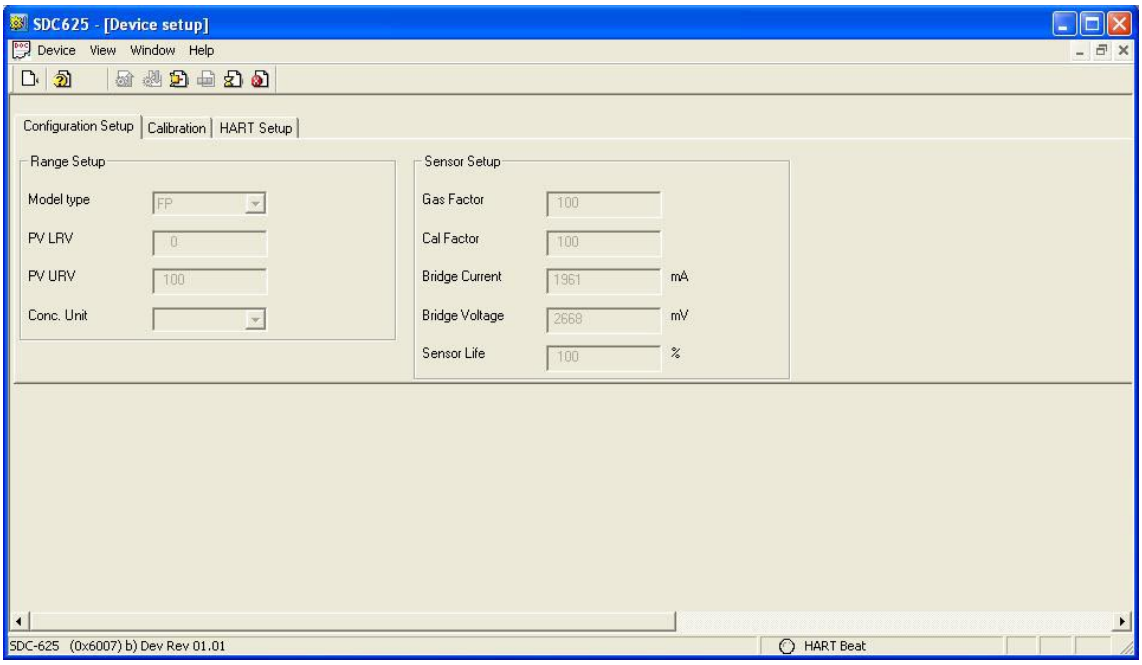

Figure 109 FP Configuration Setup

This screen will vary depending on the type of Model 700 sensor attached to the HART-RAM. The Range Set up will display the Model Type of the sensor, followed by the PV LRV (Primary Variable Lower Range Value) and the PV URV (Primary Variable Upper Range Value), and the Conc Units (Concentration Units), the display may also show the Sensor Range. The Sensor Setup portion of the screen will display sensor specific parameters:

DM

- Sensor Range
- Cell Bias
- Gain Code
- Raw Counts
- Sensor Life

FP

- Gas Factor
- Cal Factor
- Bridge Current
- Bridge Voltage
- Sensor Life

IR

- Gas Factor
- Active Counts
- Reference Counts
- Range Multiplier
- Sensor Life

PI

- Sensor Range
- Gain Code
- Raw Counts
- Zero Offset
- Sensor Life

TP

- Heater Power
- Heater Voltage
- Sensor Resistance
- Heater Current
- Sensor Life

Note: The values above are read when the HART-RAM boots up and are not updated in real-time.

10.6.3.2 Calibration

The Calibration screen displays the days since the last calibration, and the auto span level. This screen also allows the user to calibrate the sensor by performing an Auto Zero Calibration and an Auto Span Calibration. Calibration of the sensor using this feature also notifies the Host that the sensor is in calibration mode.

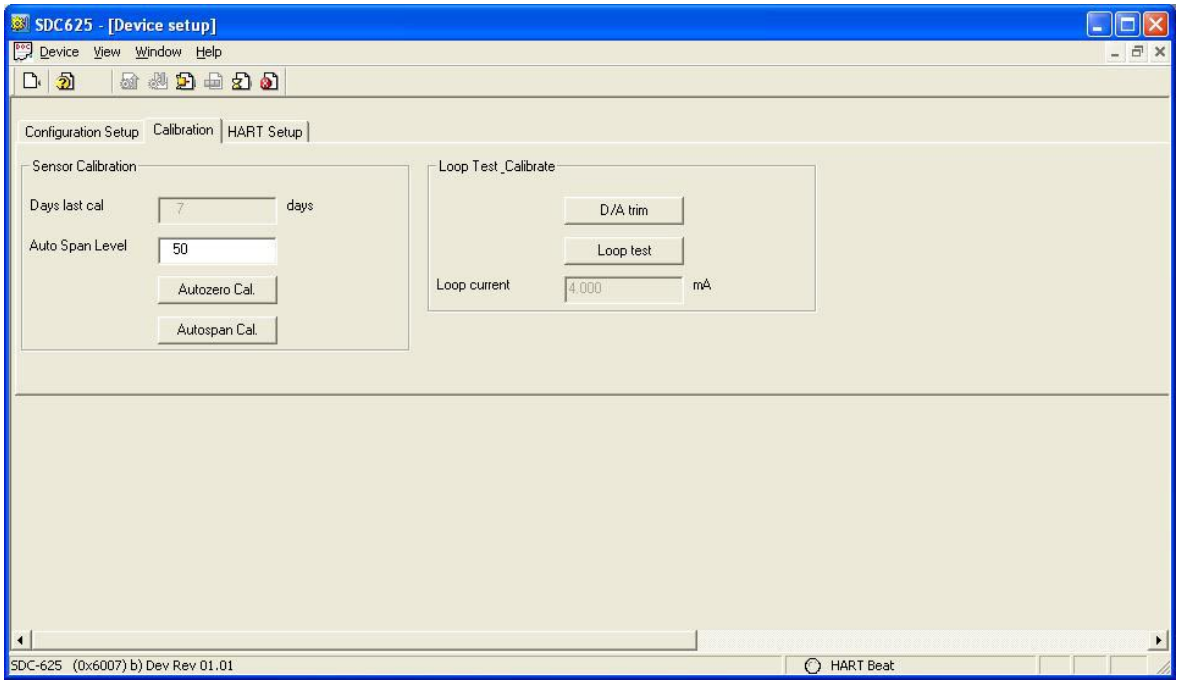

Figure 110 FP Calibration Screen

10.6.3.3 Sensor Calibration using the HART-RAM

Calibration of a sensor using the HART-RAM follows the same principle as calibrating the sensor via the magnetic interface. Since most of the calibration information can be found in the associated sensors manual, it is important to have the sensor manual on hand when performing sensor calibration.

Each sensor type has different criteria that need to be met before calibration of the sensor should be performed. Refer to the appropriate sensor manual for specific information on gas to be used, flow rates, interference gas, cross calibration gas, and other sensor specific criteria.

NOTE: The TP sensor does not perform an Auto Zero function. Although the menu may provide this option, the test is invalid, and is not performed.

Auto Zero

Auto Zero function is used to zero the sensor. Local ambient air can be used to zero most sensors as long as there are no traces of target or interference gases. If this cannot be confirmed, then a zero air or N_2 should be used. N_2 *must* be used for zero calibration of O_2 deficiency sensors.

Material Requirements:

- Handheld Communicator or PC and interface for HART-RAM.
- Detcon PN 613-120000-700 Model 700 Splash Guard with integral Cal Port. -OR-
  Detcon PN 943-000006-132 Threaded Calibration Adapter
- Detcon PN 942-001123-000 Zero Air cal gas (or use ambient air if no target gas is present).
- Detcon P/N 942-640023-100 Nitrogen 99.99%

NOTE: Refer to appropriate sensor manual for the specific information on zero gas.
For DM, IR, and PI sensors, the zero gas source may be zero air or N_2, but must be pure N_2 (99.99%) for O_2 deficiency sensors.
For FP sensors, zero air should be used. Zero Air should have a normal background of 20.89% O_2. Pure Nitrogen (N_2) should not be used or errors may result.

Auto Zero consists of entering “AutoZero Cal” and following the menu-displayed instructions.

11. If applicable install the Calibration Adapter or Splash Guard Adapter with integral Cal Port.
12. If applicable connect zero gas to the cal port.
13. Select “AutoZero Cal” from the Sensor Calibration section of the screen.

14. Upon entering Auto Zero Calibration the procedure will prompt to begin Auto Zero Calibration. If zero gas is to be applied to the sensor, apply the gas.

NOTE: Upon entering calibration the 4-20mA signal drops to 2mA and is held at this level until the program returns to normal operation.

15. The procedure will prompt to verify that no gas is present, and the sensor will perform Auto Zero.

NOTE: The sensor will scroll "**Zero Cal . . . Setting Zero . . . Zero Saved**" twice.

16. After successfully setting Zero Cal the sensor and the HART Interface will return to Automatic Mode.
17. Remove the zero gas and calibration adapter if applicable.

Auto Span

The Auto Span function is used to calibrate the sensor. Unless otherwise specified by the associated sensor manual, span calibration is recommended at 50% of range.

Material Requirements:

- Handheld Communicator or PC and interface for HART-RAM.
- Detcon PN 613-120000-700 Model 700 Splash Guard with integral Cal Port. -OR-
  Detcon PN 943-000006-132 Threaded Calibration Adapter

- Detcon Span Gas (See Detcon for Ordering Information). Recommended span gas is 50% of range with target gas. Other suitable span gas sources containing the target gas in air or N_2 balance may be acceptable.

NOTE: Refer to the appropriate sensor manual for information regarding Span Gas, flow rates, cross interference, or other sensor specific criteria.

Auto Span consists of entering "Autospan Cal" and following the display. The procedure will ask for the application of span gas. The applied gas concentration must be equal to the Autospan gas level setting. The factory default setting and recommendation for span gas concentration is normally 50% of range. If a span gas containing the recommended concentration is not available, other concentrations may be used as long as they fall between 5% and 100% of range. However, any alternate span gas concentration value must be set in the "**Auto Span Level**" field before proceeding with "Autospan cal".

CAUTION: Verification that the calibration gas level setting matches the calibration span gas concentration is required before executing "Autospan Cal". These two numbers must be equal. Refer to the appropriate sensor manual for more information.

1. If applicable install the Calibration Adapter or Splash Guard Adapter with integral Cal Port.
2. Verify that the Auto Span Level is equal to the calibration span gas concentration. If the Auto Span Level is not equal to the Calibration span gas concentration, adjust the Auto Span Level.
3. Connect the Cal Gas to the sensor, but do not apply the gas.
4. Select "Autospan Cal" from the Sensor Calibration section of the screen.

NOTE: Upon entering calibration the 4-20mA signal drops to 2mA and is held at this level until the program returns to normal operation.

5. Upon entering the procedure the procedure will prompt to begin Auto Span Calibration.
6. The procedure will prompt to apply span gas. Apply span gas from the attached cal gas cylinder and respond to the prompt.

NOTE: The sensor reading will respond to the gas and will switch to displaying a flashing "**XX**".

NOTE: Assuming acceptable sensor signal change, after 1 minute the reading will auto-adjust to the programmed Auto Span level. During the next 30 seconds, the Auto Span sequence checks the sensor for acceptable reading stability. If the sensor fails the stability check, the reading is re-adjusted back to the Auto Span level and the cycle repeats until the stability check is passed. Up to three additional 30-second stability check periods are allowed before the unit reports a "**Stability Fault**" twice and the sensor will return to normal operation, aborting the Auto Span sequence. The sensor will continue to report a "**Stability Fault**" and will not clear the fault until a successful Auto Span is completed.

NOTE: If the sensor passes the stability check, the sensor reports a series of messages:
"**Span OK**"

"**Sensor Life XXX%"**
"**Remove Span Gas**"

NOTE: When calibrating O2 deficiency sensors, there is no requirement to clear to <5% of range. The sensor will return to normal operation immediately after span adjustment.

7. When the sensor passes calibration the procedure will prompt to remove the span gas. Unsuccessful completion of the span calibration will create a Global Fault, and "Autospan Cal" will be aborted with a change to the HART Sensor Status (refer to section 9.4.2.2).
8. After successfully setting span cal the sensor and the HART Interface will return to Automatic Mode.
9. The Auto Span Calibration is complete
10. Remove the cal gas and calibration adapter if applicable

NOTE 1: If the sensor fails the minimum signal change criteria, a **"Range Fault"** will be declared and a "**Fault Detected**" message will be displayed alternately on the sensor with the current reading. The HART Sensor Status will change to reflect a Range Fault.

NOTE 2: If the sensor fails the stability criteria, a **"Stability Fault"** will be declared and a "**Fault Detected**" message will be displayed alternately on the sensor with the current reading. The HART Sensor Status will change to reflect a Sensor Fault.

NOTE 3: If the sensor fails the clearing time criteria, a "**Clearing Fault**" will be declared and a **"Fault Detected**" message will be displayed alternately on the sensor with the current reading. The HART Sensor Status will change to reflect a Clearing Fault.

10.6.3.4 Loop Test Calibrate

The Calibration Screen contains a Loop Test Calibration section. This section displays the loop current reading and allows the user to perform D/A trim and Loop Test. D/A trim is used to calibrate the 4mA and 20mA set points in the Digital/Analog converter. Loop test allows the user to set the mA output to any level within range; this can be a good troubleshooting tool for line degradation. A DVM capable of reading milliamps and a 100~250 Ohm resistor are required to perform D/A trim and/or Loop test.

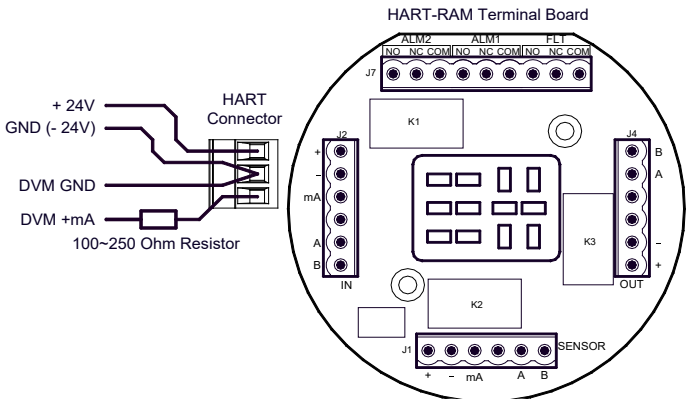

Figure 111 DVM Connection

D/A Trim

10) Select “D/A trim” from the Loop test Calibrate section of the screen.
11) The procedure will prompt to connect a meter: (Refer to Figure 101.)
    a) Disconnect the wire from the HART Connectors mA/HART position.
    b) Connect one end of a 100~250Ohm resistor to the mA/HART position of the HART Connector.
    c) Connect the positive lead of a DVM set to measure milliamps to the other end of the resistor.
    d) Connect the negative lead (-) of the DVM to the GND position of the connector.
12) The procedure will set the output to 4mA, and prompt for the DVM Reading. Input the reading and select “OK”.
13) The HART-RAM will readjust the output for 4mA, and inquire if the reading is 4mA on the DVM (select “YES” or “NO”).
14) If the reading on the DVM is 4mA, select “YES” and “OK” and the HART-RAM will continue on to 20mA. If the reading is not 4mA, select “NO” and “OK” and the procedure will re-run the 4mA calibration (Step 3).
15) The procedure will set the output to 20mA, and prompt for the DVM Reading. Input the reading and select “OK”.
16) The HART-RAM will readjust the output for 20mA, and inquire if the reading is 20mA on the DVM (select “YES” or “NO”).
17) If the reading on the DVM is 20mA, Select “YES” and “OK”. If the reading is not 20mA, select “NO” and “OK” and the procedure will re-run the 20mA calibration (Step 6).
18) When both the 4mA and the 20mA have been calibrated the procedure will return the HART-RAM to automatic control.

Loop Test

19) Ensure that the DVM is connected as prescribed in Figure 101:
    a) Disconnect the wire from the HART Connectors mA/HART position.
    b) Connect one end of a 100~250Ohm resistor to the mA/HART position of the HART Connector.
    c) Connect the positive lead of a DVM set to measure milliamps to the other end of the resistor.
    d) Connect the negative lead (-) of the DVM to the GND position of the connector. (Figure 101)
20) Select “Loop test” from the Loop test Calibrate section of the screen.
21) The procedure will prompt for a setting (“4mA”, “20mA”, “Other”, and “End”).
22) Select one of the settings or “End” to exit.
23) If “Other” is selected, the procedure will prompt for a value. Only valid values will be accepted.
24) Select “OK”.
25) The HART-RAM will set the output for selected milliamp value.
26) Compare the reading on the DVM to the output displayed. Select “OK” when ready to continue
27) The procedure will return to Step 3. If “End” is selected, the HART-RAM will exit Loop test and return to automatic control.

10.6.3.5 HART Setup

The HART Setup Screen allows parameters of the HART-RAM to be changed or modified. Changes made on this screen will not be applied until power is cycled on the unit.

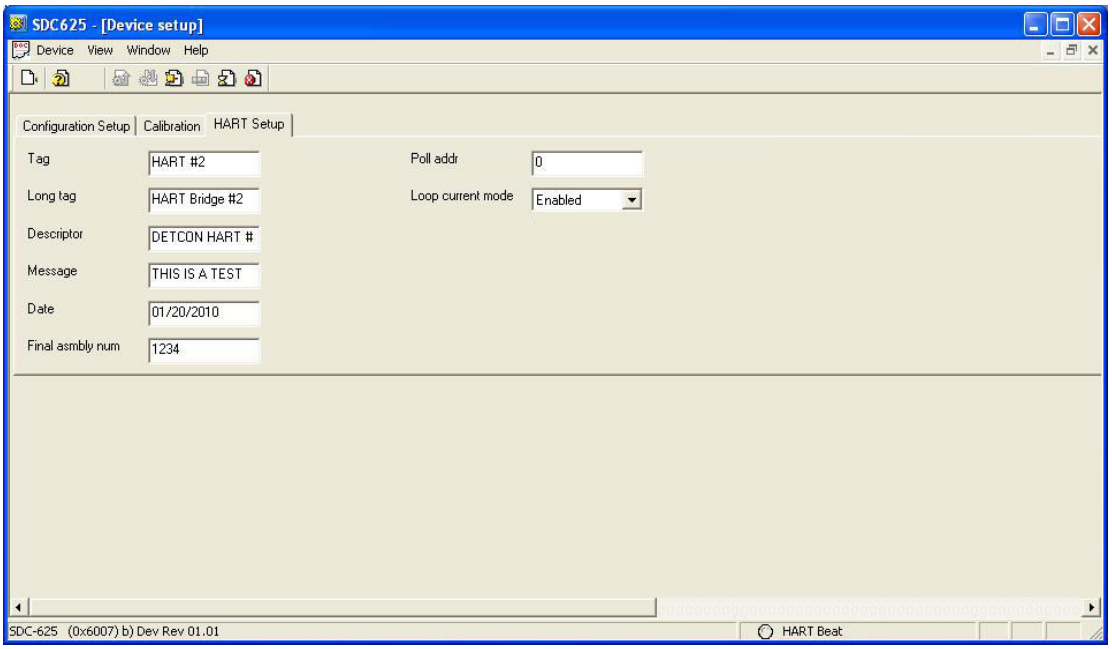

Figure 112 HART Setup

- Tag – Text that is associated with the field device installation. This text can be used by the user in any way. A recommended use is a unique label that correlates to a field device label: a plant drawing, or on a control system. This variable is also used as a type of data link layer address handle.
- Long Tag – Functions exactly like the Tag except the size is larger (max 32 ISO Latin 1 characters).
- Descriptor – Text that is associated with the field device. This text can be used by the user in any way. There is no specific recommended use.
- Message – Text that is associated with the field device. This text can be used by the user in any way. There is no specific recommended use.
- Date – Gregorian calendar date that is stored in the field device. This can be used by the user in any way. There is no specific recommended use. Note: This field is not updated by the HART-RAM and does not indicate the current date.
- Final asmbly num – Number that is used for identification purposes, and is associated with the overall field device.
- Poll addr – This number is the address of the HART-RAM on a network and must be set to 0.

10.7 HART-RAM Electronics Warranty

Teledyne Detcon Inc. warrants, under intended normal use, each new Model 700 HART-RAM module to be free from defects in material and workmanship for a period of two years from the date of shipment to the original purchaser. All warranties and service policies are FOB the Detcon facility located in The Woodlands, Texas.

Terms & Conditions:

- Shipping point is FOB the Detcon factory.
- Net payment is due within 30 days of invoice.
- Detcon, Inc. reserves the right to refund the original purchase price in lieu of HART-RAM replacement.

10.8 Appendix

10.8.1 Specifications

Inputs

Any Model 700 Gas Sensor

See specific Model 700 Gas Sensor manual for specifications

Outputs

4-20mA signal with HART Version 7

Relay Contacts - Three Form C contacts rated for 5A @ 30 VDC/250 VAC

RS-485 Modbus™ RTU

Input Voltage

11-30VDC

Power Consumption (excluding 700 Gas Sensor)

<1.5 Watts at 24VDC (Normal)

<2.5 Watts at 30VDC (Maximum)

Ambient Temperature

-40°C to +70° C (FP, TP, and IR-700A), -40°C to +55° C (DM-700A), -20°C to +55° C (PI-700A)

10.8.2 Spare Parts

Part Number	SPARE PARTS
500-005136-100	RAM DISPLAY PCA
500-005132-200	HART BRIDGE “PLUG IN” PCA
500-005134-100	HART-RAM TERMINATION BOARD PCA
897-850901-010	ALUMINUM CONDULET W/GLASS LENS COVER
897-850901-316	SS CONDULET W/GLASS LENS COVER
8522-750	¾” NPT Plug
960-202200-000	Condensation Prevention Packet
306-175705-100	6-Pin Connector
306-175708-000	9-Pin Connector

11. Model RAM Module

Remote Sensor/Alarm Relay Module
For use with Model 700 series sensors

TELEDYNE DETCON, Inc.
4055 Technology Forest Blvd.,
The Woodlands, Texas 77381
Phone 713.559.9200

WWW.TELEDYNEGASANDFLAMEDETECTION.COM

11.1 Introduction

11.1.1 Description

The Model 700 Remote Sensor/Alarm Relay Module (known as the Remote Alarm Module or RAM) is sold separately as an accessory for Model 700 Gas Sensors. It is a universal design and can be used with any of the Model 700 Gas Sensors. The RAM is provided in an explosion-proof junction box constructed of either epoxy-painted aluminum (Figure 113) or 316 stainless steel and includes a glass-viewing window.

Figure 113 700 RAM

The RAM performs two main functions. The first function is to set gas alarm levels and to configure the three local relay contacts. The second function is to operate a Model 700 Gas Sensor remotely. The remote sensor function is typically used when the sensor must be mounted in a position where it cannot be viewed or accessed readily. Both functions can be used at the same time.

The RAM provides the 4-20mA output directly from the Model 700 Gas Sensor. The RAM acts as a Modbus™ master to the Model 700 Gas Sensor in order to display the reading and execute the remote control functions. It acts as a Modbus™ slave to any master control device and simply repeats the Modbus™ output from the 700 Gas Sensor it is connected to.

11.1.2 Installation

The RAM can be installed as a wall mount or pipe mount using the mounting holes of the explosion-proof junction box. It should be oriented such that the LED display is horizontal. If the 700 Gas Sensor is mounted directly to the RAM, use 0.5" spacers underneath the mounting holes to provide access clearance for the 700 Gas Sensor (Figure 114).

NOTE: Block any unused ¾" NPT holes with the proper Plug. (Detcon P/N 8522-750)

NOTE: Install only where the ambient temperature at place of installation is within the rated temperature limits of this device (-40ºC to +70ºC).

NOTE: All devices connecting to the ¾" NPT conduit entries should be tightened to a minimum of 16 Foot-Pounds torque.

NOTE: The flamepath joints are not intended to be repaired if damaged.

NOTE: For ATEX use, cable glands, adapters, and/or blanking elements shall be ATEX certified to Ex d IIC and shall be installed.

WARNING: Cables and cable glands must be rated for ≥90°C.

NOTE: Use internal and external grounding points as required or recommended by electrical installation guidelines. Tighten to full hand-tight or 12 Foot-Lbs torque.

NOTE: Connect earth wire to crimped terminal (≥4mm^2) (Internal and external ground points)

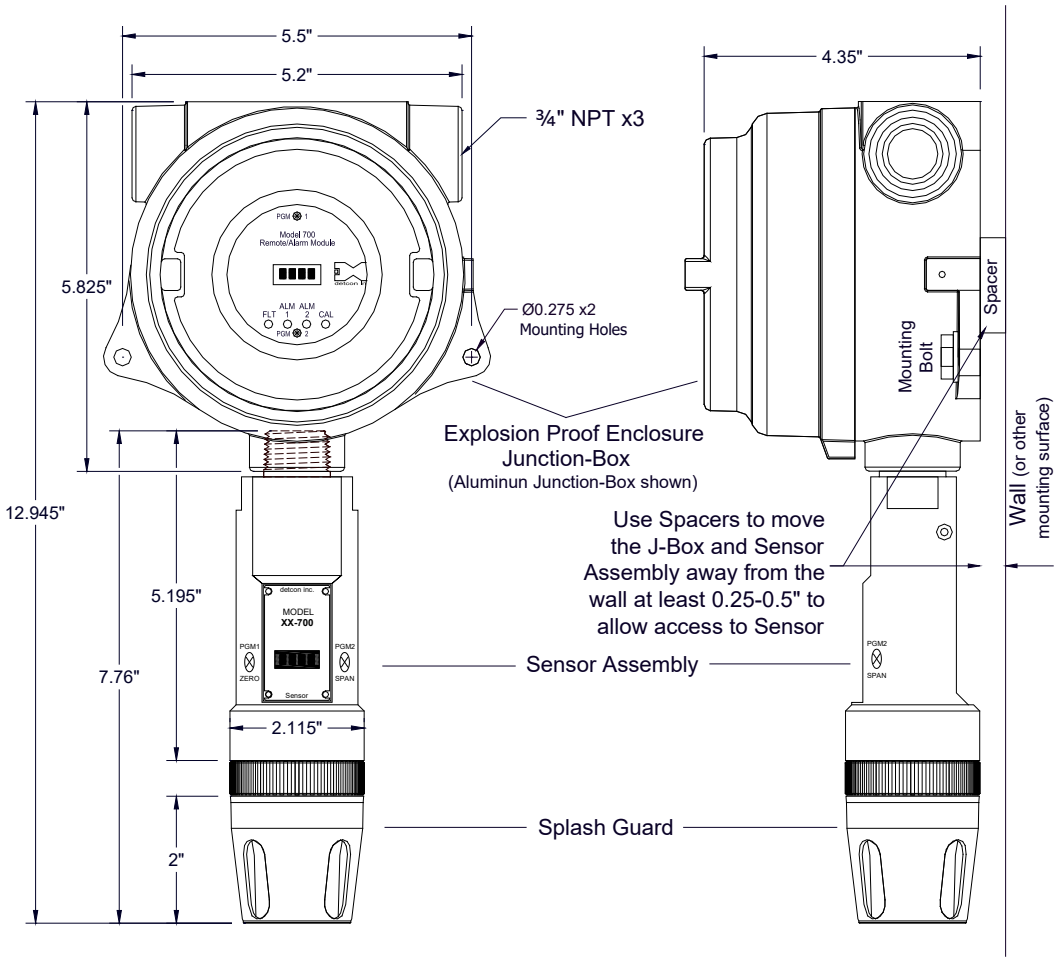

Figure 114 Mounting RAM with 700 Sensor

The RAM Electronics package consists of three printed circuit assemblies (PCAs). The top two PCAs (RAM display and RAM connector board) and the RAM faceplate are enclosed in a molded plastic retaining guard and can be accessed by removing the junction box cover and using the brass pull knobs to pull the package directly out of the enclosure. The bottom PCA (terminal board) will remain attached to the bottom of the junction box via two machine screws allowing the RAM display and RAM connector board to unseat from the 12-pin plug-in connector and provide access to the terminal board connectors (Figure 117). To install the electronics package, properly align the 12-pin plug-in connector and gently push the RAM in until it is fully seated to the terminal board. The RAM faceplate will be even with the top of the junction box when installed properly. The RAM top should be flush with the top of the enclosure before screwing down the junction box cover.

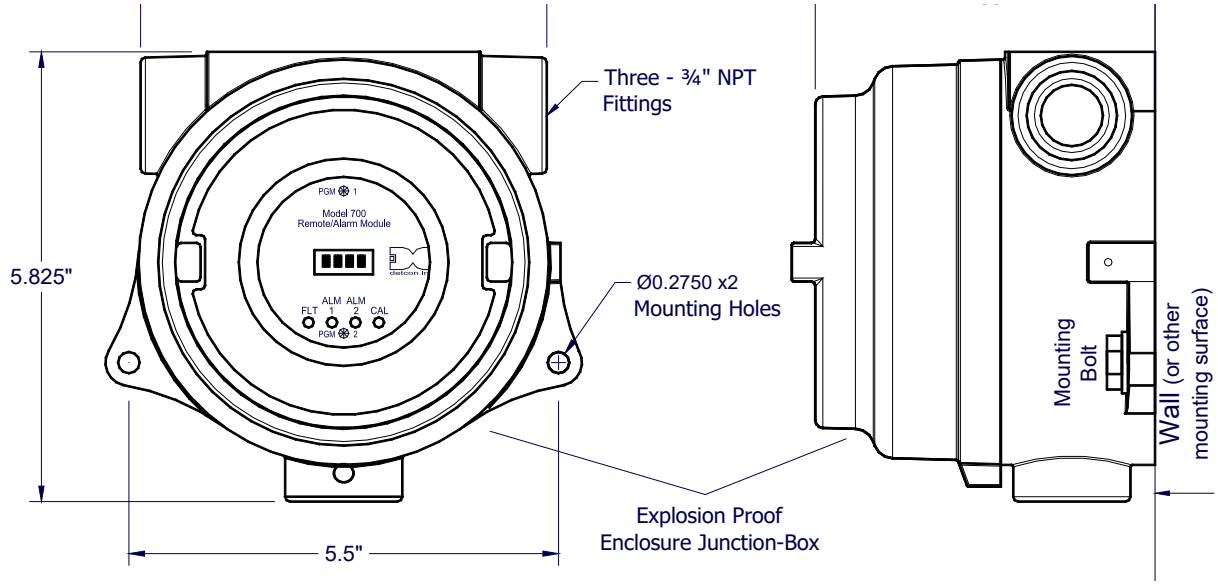

Figure 115 RAM Mounting

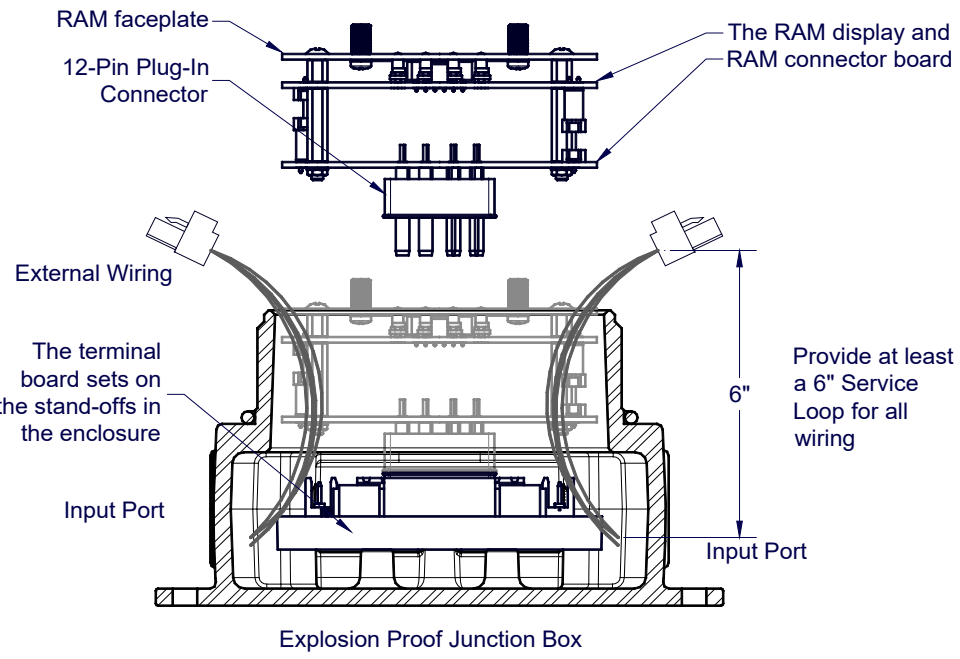

Figure 116 Exploded View of Assembly

11.1.3 Field Wiring

The field wiring connections are made to the bottom PCA (terminal board) of the RAM using a series of connector blocks. There is a 6-pin terminal block for connection to the 700 Gas Sensor (labelled SENSOR), a 9-pin terminal block for connection to the 3 relay contacts (labelled RELAY OUTPUT), a 6-pin terminal block for connection of power, mA output and Modbus™ interface to the host device (labelled IN) and a 6-pin terminal block for connection of power and Modbus™ interface to an additional device (labelled OUT).

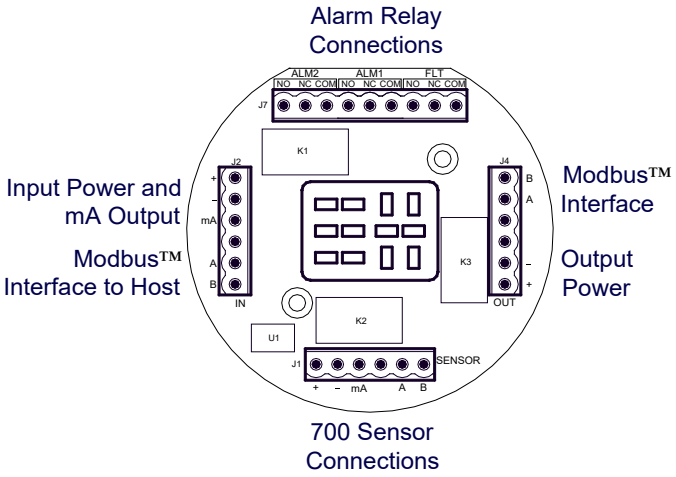

Figure 117 Interface connections on terminal board

The user will typically connect the 700 Gas Sensor directly to the RAM if there is no requirement for remote sensor separation (Figure 118). In this case, the 700 sensor will not require its own junction box and it is not necessary to install/use the Transient Protection Module shipped with the 700 sensor. The 700 sensor may arrive from the factory pre-assembled with the RAM in the j-box, but only if it is ordered in this configuration. In this configuration, the wires from the 700 sensor will be directly connected to the 6-pin terminal block labelled “SENSOR” on the terminal board.

NOTE: If the 700 sensor and RAM are directly connected, it is not necessary to install/use the Transient Protection Module that is shipped with every 700 Gas Sensor.

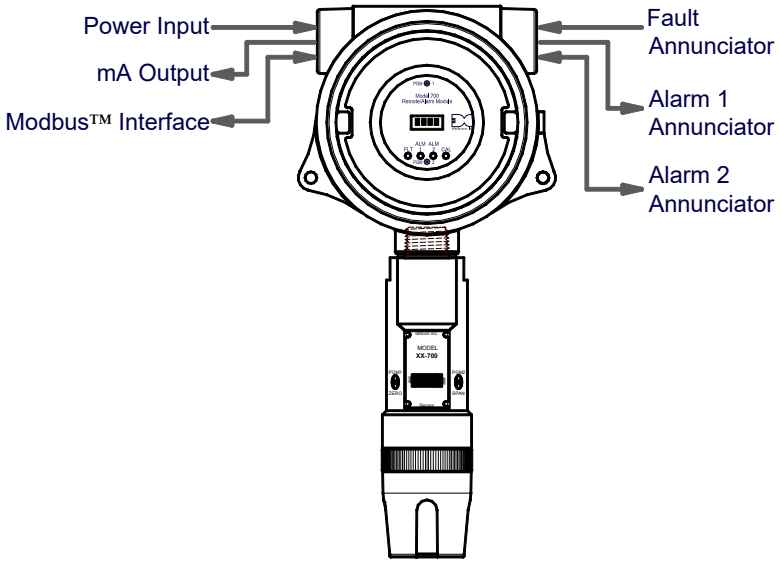

Figure 118 Installation with 700 Gas Sensor

If remote sensor separation is required, the RAM will be separated from the 700 sensor. Remote separation distances of up to 1000 feet are possible with the recommended cables.

NOTE: It is highly recommended to install the interconnecting cabling inside rigid metal conduit to eliminate potential EMI and RFI interference.

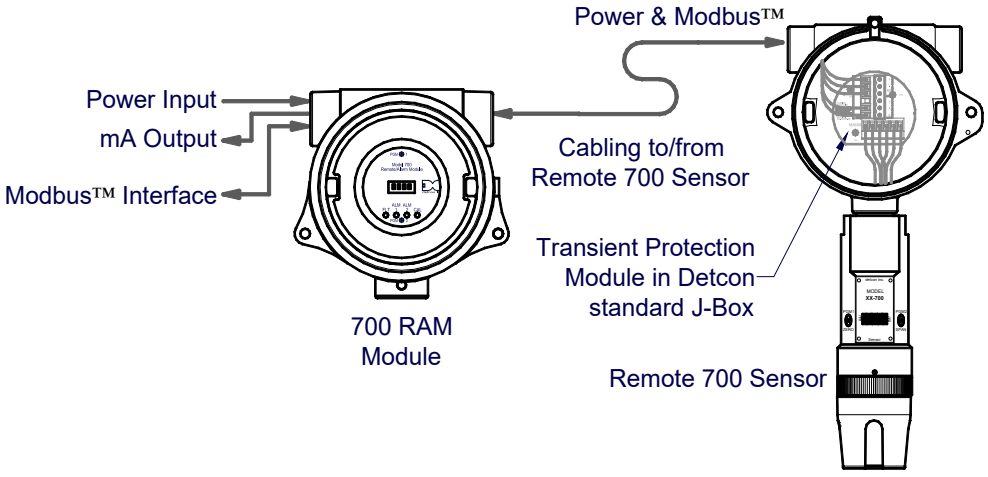

Figure 119 Remote 700 Gas Sensor with RAM

The recommended cable for remote sensor separation is Belden 8770 (18AWG shielded 3-wire cable) for connection of power and mA signal return and Belden 9841 (24AWG shielded twisted pair) for serial Modbus™ communications.

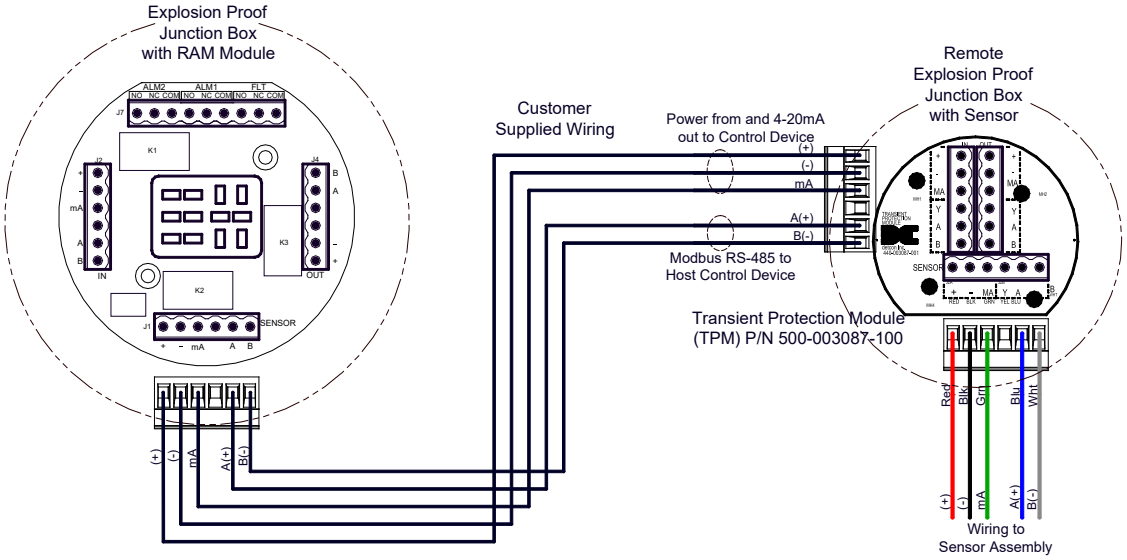

Figure 120 Remote Sensor Wiring

NOTE: Both the 3-wire power/mA cable and the 2-wire Modbus™ serial communications cable are required when remote wiring between the RAM and the 700 Gas Sensor.

NOTE: The same recommended cables should be used for the connection between a Modbus™ master control device and the RAM. However, if only the 4-20mA signal is being used by the master/host controller, then only the 3-wire cable is required.

11.2 Operator Interface

The operator interface of the RAM is very similar to the Model 700 Gas Sensor. It uses the identical LED display, same programming magnet, and has the same magnetic programming switches (PGM1/ZERO and PGM2/SPAN). The main difference is that the 700 RAM has LED indicators for the 3 relays (ALM1, ALM2 and FAULT) and a CAL LED to indicate when the 700 sensor is in calibration or being polled serially by a master control device.

The gas reading, gas units, and fault status reported by the RAM will mimic that of the 700 Gas Sensor. The Modbus™ output from the RAM repeats the Modbus™ output from the 700 Gas Sensor.

NOTE: If the Model 700 Gas Sensor is directly connected to the RAM and junction box, then the gas sensor operation should be exercised through the 700 Gas Sensor (and not the RAM). This is the recommended practice since the RAM contains a limited number of sensor operational control functions. If the RAM and 700 Gas Sensor are separated, then normal remote gas sensor operation should be exercised through the RAM.

The operating interface is menu-driven via the two magnetic program switches located under the target marks on the RAM faceplate. The two switches are referred to as “PGM1” and “PGM2”. The menu list consists of three major items that include sub-menus as indicated below. (Refer to the complete Software Flow Chart Figure 121).

Normal Operation

Current Reading and Fault Status

Calibration Mode

AutoZero (if applicable)
AutoSpan

Program Mode

View Sensor Status (representative of whichever Model 700 Gas Sensor is attached)
Set AutoSpan Level
Set Serial ID
Alarm 1 Settings
Alarm 2 Settings
Fault Settings
Signal Output Check

The user interface of the RAM is designed to mimic that of the Model 700 Gas Sensor. However, only the functions deemed critical for normal remote sensor operation are available. The 5 menu functions that are available for the remote control of the 700 Gas Sensor are:

AutoZero – used to perform AutoZero remotely

AutoSpan – used to perform AutoSpan remotely, user is required to apply span gas flow to remote gas sensor

View Senor Status – displays the complete list of sensor status and diagnostic indicators

Set AutoSpan Level – used to change the span gas concentration

Signal Output Check – used to generate simulated outputs from the sensor for system diagnostic purposes

NOTE: For any other required operational changes, the 700 Gas Sensor must be accessed directly.

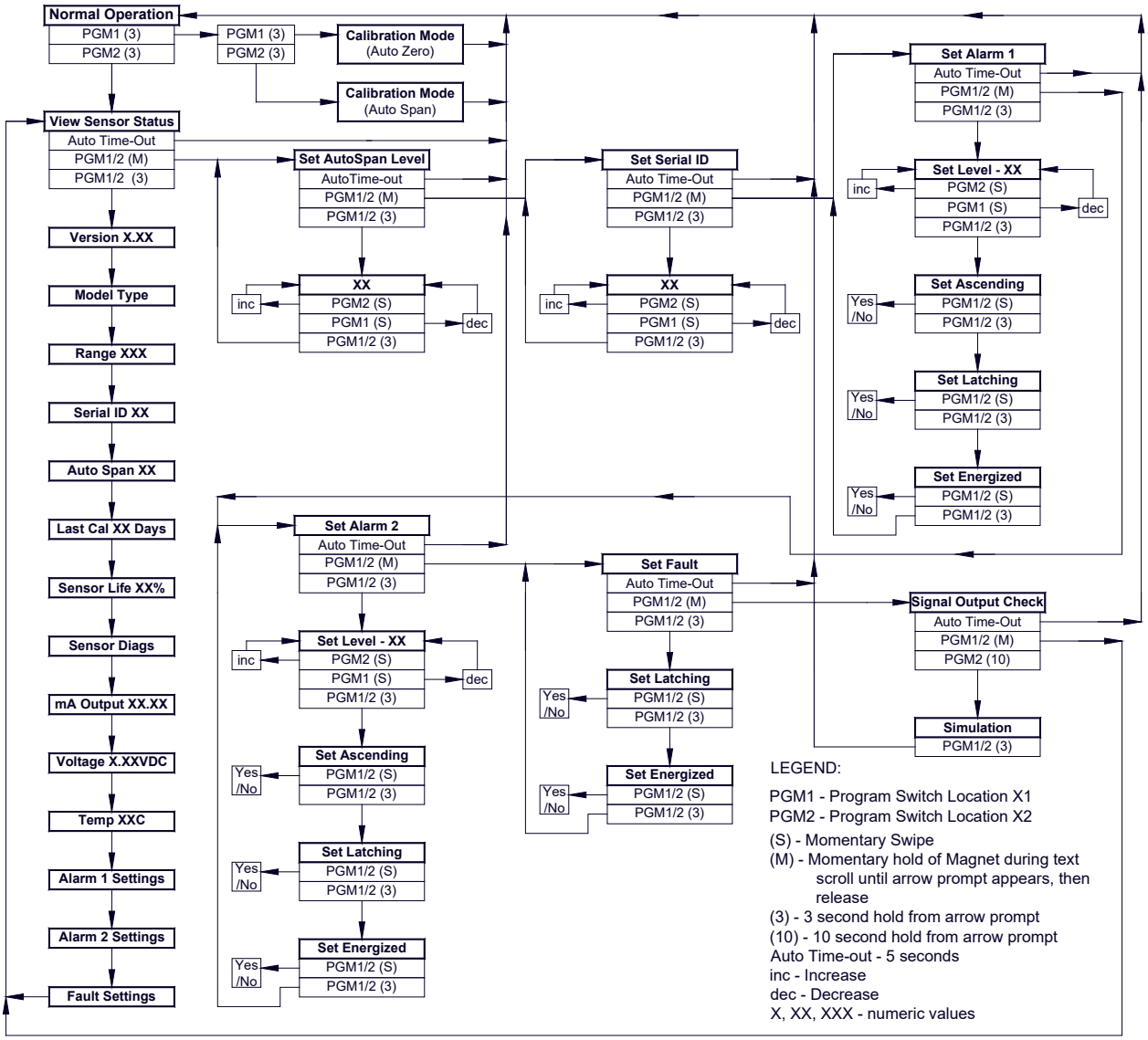

Figure 121 RAM Software Flowchart

11.3 Set-up and Normal Operation

In normal operation, the RAM display continuously shows the current sensor reading, which will typically appear as " 0 ". Once every 1 minute the LED display will flash the sensor's measurement units and gas type (i.e. % LEL). If the 700 Gas Sensor or RAM is actively experiencing any diagnostic faults, a "Fault Detected" message will flash on the display once every minute. When the unit is in "Fault Detected" mode with the red Fault LED on, PGM1 or PGM2 can be swiped to invoke a display of the active faults.

In normal operation, the 4-20mA current output from the RAM corresponds with the present gas concentration and full-scale range. The RS-485 Modbus™ serial output provides the current gas reading and fault status on a continuous basis when polled.

Successful Modbus™ communications between the RAM and the RS-485 Master Controller will be indicated by a blinking "CAL" LED. If the Modbus™ communication between the RAM and the 700 Gas Sensor is not functioning the RAM will display "COMM" and the "FLT" LED will be illuminated.

NOTE: The 700 Gas Sensor must be set to Serial ID = 01 for proper communications set-up with the RAM.

11.3.1 View Sensor Status

View Sensor Status displays all current configurational and operational parameters from the 700 Gas Sensor attached to it. These typically include sensor type, software version number, detection range, AutoSpan level, days since last AutoSpan, estimated remaining sensor life, sensor diagnostics, input voltage, 4-20mA output, and sensor ambient temperature.

To access the **View Sensor Status** menu, hold the magnet over PGM2 (🡻) until the arrow prompt appears and then hold continuously for 3 seconds. This will display the **View Sensor Status** text scroll. From the "View Sensor Status" text scroll, hold the magnet over PGM1 (🡹) or PGM2 (🡻) until the arrow prompt appears and then hold continuously for an additional 3 seconds. The display will scroll the complete list of sensor status parameters sequentially:

Current Software Version (of the RAM)
Sensor Model Type
Range of Detection
Serial ID address
AutoSpan Level
Days Since Last AutoSpan
Remaining Sensor Life
Sensor Diagnostics (varies by sensor type)
4-20mA Output
Input Voltage Supply
Sensor Temperature
Alarm 1 Settings
Alarm 2 Settings
Fault Settings

When the sensor status list sequence is complete, the RAM will revert to the "View Sensor Status" text scroll. The user can then choose to either: 1) review list again by executing another 3 second hold, 2) move to another menu item by executing a momentary hold, or 3) return to Normal Operation via 15 second automatic timeout.

11.3.2 Set AutoSpan Level

Set AutoSpan Level is used to set the span gas concentration level that is being used to calibrate the sensor. This level is adjustable from 10% to 100% of range. The current setting can be viewed in **View Sensor Status**.

The menu item appears as: "Set AutoSpan Level"

From the "Set AutoSpan Level" text scroll, hold the magnet over PGM1 (⬆) or PGM2 (⬇) until the arrow prompt appears and then hold continuously for an additional 3 seconds. The display will then switch to "XX" (where XX is the current gas level). Swipe the magnet momentarily over PGM2 to increase or PGM1 to decrease the AutoSpan Level until the correct level is displayed. Hold the magnet over PGM1 or PGM2 for 3 seconds to accept the new value. The display will scroll "AutoSpan Level Saved", and revert to "Set AutoSpan Level" text scroll.

The user can then choose to either: 1) move to another menu item by executing a momentary hold, or 2) return to Normal Operation via 15 second automatic timeout.

11.3.3 Set Serial ID

The RAM can be polled serially via the RS-485 Modbus™ interface. It repeats the Modbus™ output from the 700 Gas Sensor it is connected to. The RAM Serial ID # should be set as a slave device to a master polling device. The Serial ID # of the RAM is independent of the Serial ID # of the Model 700 Gas Sensor.

NOTE: The Serial ID # of the Model 700 Gas Sensor connected to the RAM must be set to ID = 01 for proper communication between the two devices.

Set Serial ID is used to set the Modbus™ serial ID address of the RAM. It is adjustable from 01 to 127 in hexadecimal format (01-7F hex). The current serial ID can be viewed in **View Sensor Status** using the instruction given in Section 11.3.1.

The menu item appears as: "Set Serial ID"

From the "Set Serial ID" text scroll, hold the programming magnet over PGM1 (⬆) or PGM2 (⬇) until the arrow prompt appears and then hold continuously for an additional 3 seconds. The display will then switch to "XX" (where XX is the current ID address). Swipe the magnet momentarily over PGM2 to increase or PGM1 to decrease the hexadecimal number until the desired ID is displayed. Hold the magnet over PGM1 or PGM2 for 3 seconds to accept the new value. The display will scroll "New ID Saved", and revert to "Set Serial ID" text scroll.

The user can then choose to either: 1) move to another menu item by executing a momentary hold, or 2) return to Normal Operation via 15 second automatic timeout.

11.3.4 Set-up for Relay Outputs

The user interface allows for the setting and configuration of the three relay contacts of the RAM. The three relays can be optionally configured as follows:

Alarm 1: 1) gas level, 2) ascending/descending, 3) latching/non-latching and 4) energized/de-energized

Alarm 2: 1) gas level, 2) ascending/descending, 3) latching/non-latching and 4) energized/de-energized

Fault: 1) latching/non-latching and 2) energized/de-energized

The three menu items for relay output set-up are **Alarm1 Settings**, **Alarm2 Settings**, and **Fault Settings**. They are used to set the gas alarm levels and relay status for ascending/descending, latching/non-latching, and energized/de-energized**.** The gas concentration level for alarms can be set between 1-95% of the full-scale range of the 700 Gas Sensor. The current relay configurational settings can be viewed in **View Sensor Status** menu.

Ascending/Descending - In ascending mode, the alarm will trigger when the gas concentration detected is greater than or equal to the alarm set point. In descending mode, the alarm will trigger when the gas concentration detected is lesser than or equal to the alarm set point.

Latching/Non-Latching - In latching mode, the relay remains active when the alarm status has cleared. In non-latching mode, the relay is deactivated when the alarm status is cleared.

Energized/De-Energized - In energized mode, the normally open contact is closed if the alarm level has not been reached. In non-energized mode, the normally open contact is open if the alarm level has not been reached. Energized mode provides for fail-safe operation since a loss of power or cable failure will cause the contact to be open.

The menu item appears as: "Alarm1 Settings"

From the "Alarm1 Settings" text scroll, hold the magnet over PGM1 (⬆) or PGM2 (⬇) until the arrow prompt appears and then hold continuously for an additional 3 seconds. The display will switch to "Set Level" followed by "XX" (where XX is the current set-point level). Swipe the magnet momentarily over PGM2 to increase or PGM1 to decrease until the correct level is displayed. Hold the magnet over PGM1 or PGM2 for 3 seconds to accept the new value. The display will scroll "Saved".

The display will then scroll "Set Ascending" and show "Yes" or "No". Use a swipe of PGM1 to select choice (yes = ascending and no = descending). Use PGM1 for a 3 second hold to accept the selection. The display will scroll "Saved".

The display will then scroll "Set Latching" and then show "Yes" or "No". Use a swipe of PGM1 to select choice (yes = latching and no = non-latching). Use PGM1 for a 3 second hold to accept the selection. The display will scroll "Saved".

The display will then scroll "Set Energized" and then show "Yes" or "No". Use a swipe of PGM1 to select choice (yes = energized and no = non-energized). Then use PGM1 for a 3 second hold to accept the selection. The display will scroll "Saved".

At this point, configuration settings for Alarm1 are complete and the menu will shift back to "Alarm1 Settings". The user can then choose to either: 1) move to another menu item by executing a momentary hold at the end of the text scroll, or 2) return to Normal Operation via 15 second automatic timeout.

Follow the identical instructional sequence for the menu function "Alarm2 Settings". The menu function for "Fault Settings" is similar except that it does not have a selection for gas level and ascending/descending. It only has choice selections for latching/non-latching and energized/de-energized.

NOTE: The Fault relay is typically set-up as energized so that it will change states during an unexpected power loss.

NOTE: The relay contacts can be wired at the RAM's connector PCA for either Normally Open or Normally Closed.

11.3.5 Signal Output Check

Signal Output Check provides a simulated 4-20mA output and RS-485 Modbus™ output. The simulation allows the user to conveniently perform a functional system check of the entire safety system

and can be initiated at the RAM. This signal output simulation aids in performing troubleshooting of signal wiring problems.

This menu item appears as: “Signal Output Check”.

From the “Signal Output Check” text scroll, hold the magnet over PGM1 (⬆) or PGM2 (⬇) until the arrow prompt appears and then hold continuously for an additional 3 seconds. Once initiated, the display will continuously scroll “Simulation Active” until the function is stopped. During simulation mode, the 4-20mA value will be increased from 4.0mA to 20.0mA (in 1% of range increments at a 1 second update rate) and then decreased from 20.0mA to 4.0mA. The same simulation sequence is applied to the Modbus™ output gas reading.

NOTE: **Signal Output Check** stays active indefinitely until the user stops the function. There is no automatic timeout for this feature.

To end simulation mode, hold magnet over PGM1 (⬆) or PGM2 (⬇) until the arrow prompt appears and then hold continuously for an additional 3 seconds. The display will revert to either the prior menu item or the next menu item respectively.
The user can then choose to either: 1) move to another menu item by executing a momentary hold, or 2) return to Normal Operation via 15 second automatic timeout.

11.4 RS-485 Modbus™ Protocol

The RAM module provides a Modbus™ compatible communications protocol and is addressable via the program mode. This Modbus™ output is exactly repeated from the specific Model 700 sensor that is attached. Communication is two-wire, half duplex RS-485, 9600 baud, 8 data bits, 1 stop bit, no parity, with the sensor set up as a slave device. An RS-485 Master Controller up to 4000 feet away can theoretically poll up to 256 different RAM’s. This number may not be realistic in harsh environments where noise and/or wiring conditions would make it impractical to place so many devices on the same pair of wires. If a multi-point system is being utilized, each RAM must be set for a different address. Typical address settings are: 01, 02, 03, 04, 05, 06, 07, 08, 09, 0A, 0B, 0C, 0D, 0E, 0F, 10, 11…etc.
Successful Modbus™ communications between the RAM and an RS-485 Master Controller is indicated by a blinking “CAL” LED. If the Modbus™ communication between the RAM and the 700 Gas Sensor is not functioning, the RAM will display “COMM” and the “FLT” LED will be illuminated.

NOTE: The 700 Gas Sensor must be set to Serial ID = 01 for proper communications set-up with the RAM.

RS-485 ID numbers are factory default to 01. These can be changed in the field via the Operator Interface described in Section 11.3.3

NOTE: Refer to the Model 700 Gas Sensor Instruction Manual for details on the Modbus™ protocol registers.

11.5 RAM Electronics Warranty

Teledyne Detcon Inc. warrants, under intended normal use, each new Model 700 RAM module to be free from defects in material and workmanship for a period of two years from the date of shipment to the original purchaser. All warranties and service policies are FOB the Detcon facility located in The Woodlands, Texas.

Terms & Conditions:

- Shipping point is FOB the Detcon factory.
- Net payment is due within 30 days of invoice.
- Detcon, Inc. reserves the right to refund the original purchase price in lieu of RAM replacement.

11.6 Specifications

Inputs

Any Model 700 Gas Sensor

See specific Model 700 Gas Sensor manual for specifications of the sensor

Outputs

4-20mA signal

Relay Contacts - Three Form C contacts rated for 5A @ 30 VDC/250 VAC

RS-485 Modbus™ RTU

Input Voltage

11-30VDC

Power Consumption (excluding 700 Gas Sensor)

< 0.5 Watts at 24VDC (Normal)

< 1.0 Watts at 30VDC (Maximum)

Operating Temperature

-40°C to +70° C (FP, TP, and IR-700A), -40°C to +55° C (DM-700A), -20°C to +55° C (PI-700A)

11.7 Spare Parts

Part Number	SPARE PARTS
500-005136-100	RAM DISPLAY PCA
500-005135-100	RAM CONNECTOR BOARD
500-005134-100	TERMINATION BOARD PCA
897-850901-010	ALUMINUM CONDULET W/GLASS LENS COVER
897-850901-316	SS CONDULET W/GLASS LENS COVER
8522-750	¾” NPT Plug
960-202200-000	Condensation Prevention Packet
306-175705-100	6-Pin Connector
306-175708-000	9-Pin Connector

12. Revision Log

Revision	Date	Changes made	Approval
A	05/23/17	RELEASED	MM
1	11/11/19	Updated Company Information and Labels	MM