TELEDYNE
GAS AND FLAME DETECTION
Everywhereyoulook™

User Manual

SPYGLASS UV-IR & UV-IR-F

Flame Detector

User manuals in other languages are available on Website https://teledynegasandflamedetection.com

Copyright © November 2025 by Teledyne gas and flame detection

All rights reserved. No reproduction of all or part of this document, in any form, is permitted without the written consent of Teledyne gas and flame detection

All of the information that is provided in this document is accurate to the best of our knowledge.

As a result of continuous research and development, the specifications of this product may be changed without prior notice.

Email: gasandflamedetection@Teledyne.com

Limitation of Liability

- The Company TELEDYNE GAS AND FLAME DETECTION, hereinafter referred to as Teledyne gas and flame detection throughout this document, shall not be held responsible for any damage to the equipment or for any physical injury or death resulting in whole or in part from the inappropriate use or installation of the equipment, non-compliance with any and all instructions, warnings, standards and/or regulations in force.
- No business, person or legal entity may assume responsibility on behalf of Teledyne gas and flame detection, even though they may be involved in the sale of Teledyne gas and flame detection products.
- Teledyne gas and flame detection shall not be responsible for any direct or indirect damage, or any direct or indirect consequence, resulting from the sale and use of any of its products UNLESS SUCH PRODUCTS HAVE BEEN SELECTED BY Teledyne gas and flame detection ACCORDING TO THE APPLICATION.

Ownership clauses

- The drawings, specifications, and information herein contain confidential information that is the property of Teledyne gas and flame detection.
- This information shall not, either in whole or in part, by physical, electronic, or any other means whatsoever, be reproduced, copied, divulged, translated, or used as the basis for the manufacture or sale of Teledyne gas and flame detection equipment, or for any other reason **without the prior consent of** Teledyne gas and flame detection.

Warning

- This is not a contractual document. In the best interest of its customers and with the aim of improving performance, Teledyne gas and flame detection reserves the right to alter the technical features of its equipment without prior notice.
- READ THESE INSTRUCTIONS CAREFULLY BEFORE THE FIRST USAGE: these instructions should be read by all persons who have or will have responsibility for the use, maintenance, or repair of the instrument.
- This instrument shall only be deemed to be in conformance with the published performance if used, maintained, and repaired in accordance with the instructions of Teledyne gas and flame detection by Teledyne gas and flame detection personnel or by personnel authorized by Teledyne gas and flame detection.

Important Information

- The modification of the material and the use of parts of an unspecified origin shall entail the cancellation of any form of warranty.
- The use of the unit has been projected for the applications specified in the technical characteristics. Exceeding the indicated values cannot in any case be authorized.

Warranty

- Under normal conditions of use and on return to the factory, SPYGLASS UV-IR & UV-IR-F carry a 5-year warranty, excluding accessories such as tilt mount, weather protection, etc.

Waste Electrical and Electronic Equipment (WEEE directive)

European Union (and EEA) only. This symbol indicates that, in conformity with directive DEEE (2002/96/CE) and according to local regulations, this product may not be discarded together with household waste.

It must be disposed of in a collection area that is set aside for this purpose, for example at a site that is officially designated for the recycling of electrical and electronic equipment (EEE) or a point of exchange for authorized products in the event of the acquisition of a new product of the same type as before.

Table of contents

1 General Information 9
1.1 User Manual 9
1.2 Symbols used 9
2 Introduction 11
2.1 Key Features 11
2.2 Model Number Description 12
2.3 Internal tests 12
2.4 Product Overview 13
2.5 Accessories 14
3 Installation 19
3.1 General Considerations 19
3.2 Preparations for Installation 21
3.3 Required Tools 22
3.4 Certification Instructions 22
3.5 Mounting the Tilt Mount 23
3.6 Mounting the detector 24
3.7 Electrical Wiring 25
3.8 Current Output (0-20mA) Wiring 27
3.9 4 Wire Relay Connection 28
3.10 RS-485 Communication Network 29
3.11 Cabling Recommendations 30
3.12 Earth/Ground Regime 30
4 Configuration options 33
4.1 Sensitivity 34
4.2 Ultra-Fast Detection 34
4.3 Alarm Delay 34
4.4 Alarm Latch 34

4.5 Enable Pre-Alarm 0-20mA 35
4.6 Enable dirty window warning 0-20mA 35
4.7 Auxiliary Relay 35
4.8 Window Heater 36
4.9 Modbus Address 36
4.10 Manual BIT – Alarm Output Test (Full loop test) 36

5 Operation 37
5.1 Output Signals 37
5.2 Testing 38
5.3 Flame Simulator 38

6 Maintenance 39
6.1 Cleaning Procedure 39

7 Troubleshooting 41

8 Servicing 43

9 Communicator Software 45

10 Specifications 47
10.1 Fire Detection 47
10.2 Electrical Specifications 47
10.3 Outputs 48
10.4 Mechanical Specifications 49
10.5 Environmental Specifications 49
10.6 Product Labeling 50
10.7 Approvals 52
10.8 Electromagnetic Compatibility 52

11 Performance SG50-F-UV-IR 53
11.1 SG50-F-UV-IR-ASX1 53
11.2 SG50-F-UV-IR-ASX5 54
11.3 False Alarm Immunity 56

12 Performance SG50-F-UV-IR-F 57

12.1 SG50-F-UV-IR-F-ASX0, SG50-F-UV-IR-F-ASX1 57
12.2 SG50-F-UV-IR-F-ASX5 59
12.3 False Alarm Immunity 60

13 Ordering Information 61

14 Appendix A 63

List of Figures

Figure 1 : Front view of the Spyglass SG50-F-UV-IR (F) 13
Figure 2 : Rear view of the Spyglass SG50-F-UV-IR (F) 13
Figure 3 : Tilt Mount 14
Figure 4 : Weather Cover 14
Figure 5 : Pole Mount 15
Figure 6 : Air Shield 15
Figure 7 : Flame Simulator kit 16
Figure 8 : Flame Simulator front view 16
Figure 9 : Duct Mount SP-F-DMX-S01 17
Figure 10 : Duct Mount SP-F-DMW-S01 17
Figure 11 : - Horizontal field of view 20
Figure 12 : Vertical field of view 20
Figure 13 : Tilt Mount Base - Plate View 23
Figure 14 : Tilt mount base – Side View 23
Figure 15 : Detector on Tilt mount – Side view 24
Figure 16 : Terminal View 25
Figure 17 : Source 4-Wire Scheme 27
Figure 18 : Sink 4-Wire Scheme 27
Figure 19 : Source 3-Wire Scheme 28
Figure 20 : Sink 3-Wire Scheme 28
Figure 21 : 4 Wire Relay Connection 29
Figure 22 : RS-485 Networking 29

List of Tables

table 1 : Terminal Connections 26
table 2 : Detector Configuration Options 33
table 3 : Sensitivity Levels 34
Table 4 : AUX. RELAY – NORMALLY OPEN 35
Table 5 : AUX. RELAY – NORMALLY CLOSED. 35
table 6 : Output Signal 37
table 7 : Common Troubleshooting Suggestions 41
table 8 : Ordering Information 61

1 General Information

WARNING: ALL INDIVIDUALS WHO HAVE OR WILL HAVE RESPONSIBILITY FOR USING, MAINTAINING, OR SERVICING THIS PRODUCT MUST READ THIS ENTIRE MANUAL CAREFULLY. FAILURE TO USE THIS EQUIPMENT PROPERLY COULD RESULT IN SERIOUS INJURY OR DEATH.

1.1 User Manual

The instructions given in this manual must be read thoroughly before installation and start-up, particularly those concerning the points related to the safety of the end-user. This user manual must be made available to every person involved in the activation, use, maintenance, and repair of the unit.

The information, technical data, and diagrams contained in this manual are based on the information that is available at a given time. In case of doubt, contact Teledyne gas and flame detection for additional information.

The aim of this manual is to supply simple and accurate information to the user. Teledyne gas and flame detection cannot be held liable for any misinterpretations in the reading of this manual. In spite of our efforts to produce an error-free manual, it may nonetheless contain some unintentional technical inaccuracies.

In the client's interest, Teledyne gas and flame detection reserves the right to modify the technical characteristics of its equipment to increase their performance without prior notice.

The present instructions and their content are the inalienable property of Teledyne gas and flame detection.

1.2 Symbols used

Icon	Significance
	This icon and text designate information of special note.
⏚	This symbol indicates: Earth ground connection.

Icon	Significance
	This symbol denotes: Protective earth terminal. A cable of the adequate diameter must be connected to ground and to the terminal having this symbol.
	This symbol denotes: Attention! In the present mode of use, failure to adhere to the instructions preceded by this symbol can result in a risk of electric shock and/or death.
	This symbol indicates: Failure to follow instructions may result in damage to or incorrect operation of the device.
	European Union (and EEA) only. This symbol indicates that this product must not be discarded with household waste, as per the EEA directive (2002/96/EC) and your own national regulations. This product must be disposed of at a collection point that is reserved for this purpose, for example, an official site for the collection of electrical and electronic equipment (EEE) in view of their recycling, or a point of exchange for authorized products that is accessible when you acquire a new product of the same type.
	This icon and text indicate the possibility of electrostatic discharge (ESD) in a procedure that requires the reader to take the proper ESD precautions.
	Warning: This icon and text indicate a potentially hazardous situation, which, if not avoided, could result in death or injury

2 Introduction

The **Spyglass-UV-IR** flame detector provides ultra-fast response, high performance and reliable detection of a large variety of fires including hydrocarbon fires (visible and non-visible), as well as hydrogen fires (SG50-F-UV-IR only).

The **Spyglass-UV-IR-F** provides the same superior features of the UV-IR-V but is optimized for hydrocarbon fires and should not be used for non-hydrocarbon fires such as hydrogen.

The detector is certified for use in hazardous area locations; it may also be used in other areas not classified as hazardous. The two cable/conduit entries either side of the lower part of the detector housing are for connecting power and outputs to associated signaling equipment.

The detector addresses slow growing fires as well as fast eruptions of fire using improved UV-IR technology.

The detector operates in all weather and light conditions. It will automatically record a fire event (1 min pre/post alarm) using the internal data logger.

During normal operation, the flame detector performs self-tests of its optics, electronics and software. These include a periodic BIT (Built-In-Test) in which the sensors and window cleanliness are tested.

This manual covers two UV/IR detector models:

This manual covers two UV/IR detector models:

SG50-F-UV-IR: Hydrogen and hydrocarbons flame detection. UV radiation 0.18-0.26 micron range. Spectrum response of IR radiation in the 2.5 - 3.5 micron range.
SG50-F-UV-IR-F: Hydrocarbon flame detection. Spectrum response of IR radiation in the 4.0-5.0 micron range

2.1 Key Features

- **High immunity**: To false alarm
- **Ultra-fast detection mode**: Within 5 milliseconds for Hydrogen fireballs or explosions
- **Extreme sensitivity**: Up to 100 ft. (30m) for a 1ft2 (0.1m2) n-heptane pan fire
- **Built-in-Test (BIT)**: Automatic and manual internal self-test of window cleanliness and the overall operation of the detector
- **Improved speed of response option** - Very fast flame detection (sub 500ms) possible where flame may be fast moving, e.g. conveyors, aerosol filling stations, electrostatic spray paint booths
- Window heater: To avoid condensation and icing

- **Tilt mounting bracket** - for accurate detector positioning.
- **UV or Single frequency IR detection - via discrete mA level and auxiliary relay contact**.

2.2 Model Number Description

Model No are defined as follows:

SG50 - F - UV - IR - F - A S X X

SG50 - F - UV - IR - A S X X

0	Standard, no HART® and not SIL certified
1	Standard
5	Design for, but not limited to, automotive spray paint applications where compliance with 0.5 s response (per NFPA 33) is needed

1	M25
2	¾" NPT

2.2.1 Enhanced performance options

Option 5: Design for, but not limited to, automotive spray paint applications where compliance with 0.5s response (per NFPA 33) is needed

Option 0: is a standard version without SIL certification and without HART®

2.3 Internal tests

During normal operation, the flame detector performs self-tests of its optics, electronics and software. These include a periodic BIT (Built-In-Test) in which the sensors and window cleanliness are tested. Any detected fault is indicated as shown in Table 4 (in section 5). During "Dirty Window" fault the detection sensitivity is significantly reduced, while "Fault" refers to critical faults which totally prevent flame detection

2.4 Product Overview

Figure 1 : Front view of the Spyglass SG50-F-UV-IR (F)

Figure 2 : Rear view of the Spyglass SG50-F-UV-IR (F)

2.5 Accessories

2.5.1 Mounting Bracket

The detector should be mounted using the stainless-steel tilt mount part number SP-F-TILTMOUNT-SS1. This allows the detector to be securely attached to a wall, pole or other solid surface using appropriate fixings. See section 3.5 and 3.6 for further details.

Figure 3 : Tilt Mount

2.5.2 Weather Cover

The weather cover P/N SP-F-WEATHERCOVER-1 protect the detector from extreme weather conditions such heat, rain and snow

Figure 4 : Weather Cover

2.5.3 Pole mount

The pole mount enables the detectors to be installed with its tilt mount brackets. The pole mount kit we supply are suitable for 2-inch or 3- inch poles. Part number SP-F-POLEMOUNT-23.

Figure 5 : Pole Mount

2.5.4 Air shield

The air shield P/N SP-F-AIRSHIELD-1 allows installation of flame detectors in harsh weather conditions where they may be exposed to dust, sand, and other particulate matter. The connection point can be mounted in the 3, 9 or 12 o'clock locations.

- Air pressure source: Clean, dry, and oil-free air
- Pressure: 2-3 bar /30-45 psi
- Fitting: 7/16"—20UNF-2A
- Operation temperature: -55°C to +85°C / -67°F to +185°F

Figure 6 : Air Shield

2.5.5 Flame Simulator

The Spyglass UV-IR (F) may be tested using the SP-F-SIM-UVIR. The Spyglass flame simulator family provides a fast and convenient means of periodically testing the detector and control system end-to-end. Maintenance costs can be reduced as the detectors can be tested in situ without needing a hot work permit.

Figure 7 : Flame Simulator kit

Flame Simulators emit UV and IR radiation which simulates a fire to the detectors. The simulators are lightweight, easy to use, with testing distances of up to 30 ft. (9m) and capable of more than 100 activations between battery charging. Spyglass Flame Simulators are ATEX approved for use in hazardous Zone 1, Zone 2, Zone 21, Zone 22 areas.

Each simulator kit contains a carrying case, simulator, carrying strap, battery charger, user manual, Allen key and a tool for removing the simulator rear cover.

Figure 8 : Flame Simulator front view

2.5.6 Duct mount

Duct Mount SP-F- DMX-S01

The SP-F-DMX-S01 allows a standard (non-HD) detector to be mounted remotely from a potential fire source by allowing the device to look through cut hole in the side of a duct. This duct mount must be use with air shield SP-F-AIRSHIELD-S01

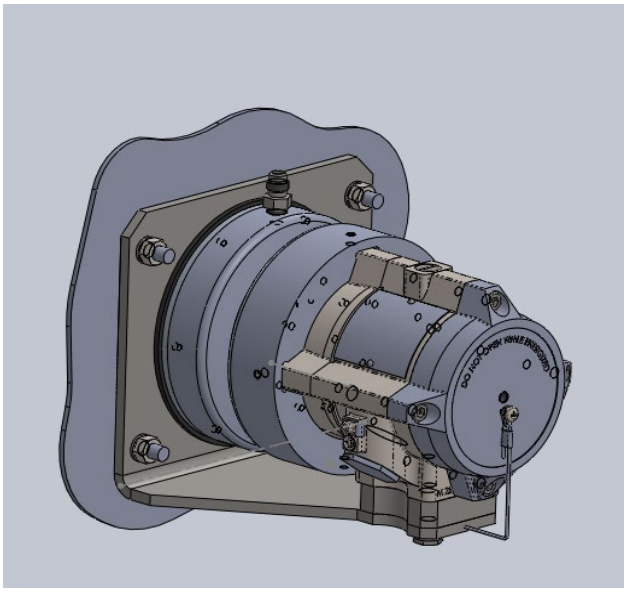

Figure 9 : Duct Mount SP-F-DMX-S01

Duct Mount SP-F- DMW-S01

The SP-F-DMW-S01 allows a standard detector to be mounted remotely from a potential fire source by allowing the device to look through a special sapphire window. It must be acknowledged that the detector cannot tell if this window becomes dirty and so a maintenance routine must be established to check the optical contamination of this window. Please note, the frequency of cleaning needed will vary from installation to installation. It is highly recommended therefore that a means of access be designed into the installation, as close as practicable to the assembly, for inspection and cleaning purposes.

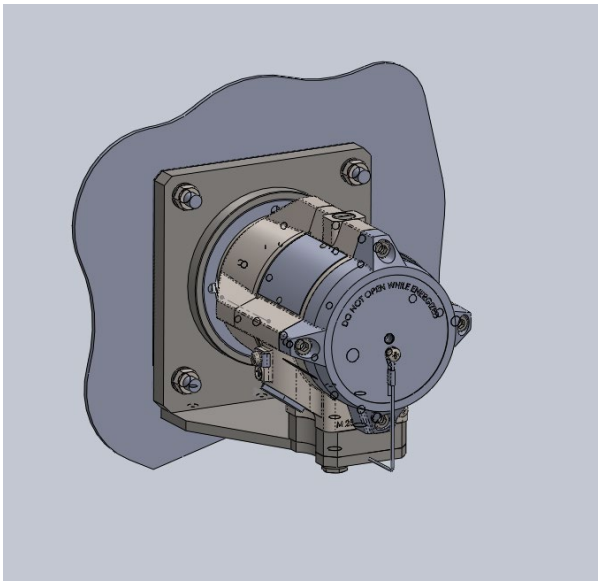

Figure 10 : Duct Mount SP-F-DMW-S01

THIS PAGE IS LEFT INTENTIONALLY BLANK

3 Installation

This chapter does not attempt to cover all of the standard practices and codes of installation. Rather, it emphasizes specific points of consideration and provides some general rules for qualified personnel. You must always observe special safety precautions.

3.1 General Considerations

This section includes important information

- To help obtain optimal performance, the detector should be aimed toward the center of the hazard or area to be monitored and protected ("detection zone") and have, to the extent that is required, an unobstructed view of the protected area. Whenever possible, the detector face should be tilted (aimed) down at an angle to prevent the accumulation of dust and dirt.
- Do not start an installation until the performance target, system configuration, installation location and coverage considerations have been defined by the responsible person.

To ensure optimal performance the following guidelines should be addressed:

Sensitivity

To determine the sensitivity level, the following issues should be considered:

- The size of the fire to be detected at the determined distance.
- The type of flammable fuel.

Spacing and Location

Consider the following factors when determining the number of detectors and their locations in the protected area:

- The size and shape of the protected area
- The nature of the hazards, including materials stored or used and the protected objects
- The sensitivity of the detectors
- If there are any obstructed lines of sight
- The field of view of the detectors (See Figure 11 and Figure 12)

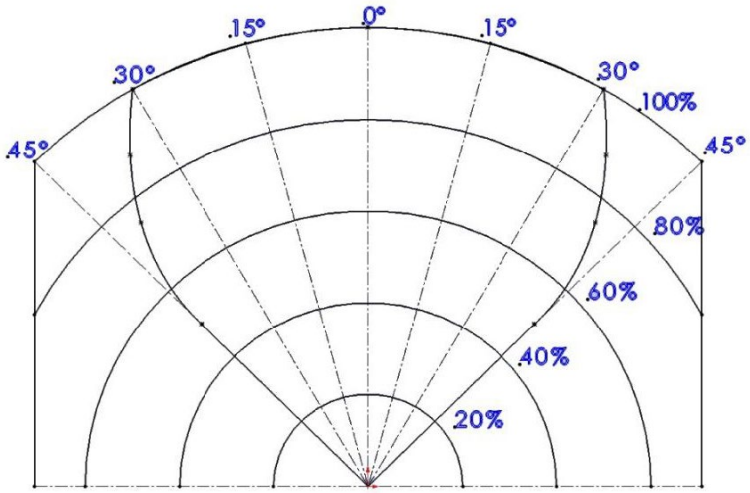

Figure 11 : - Horizontal field of view

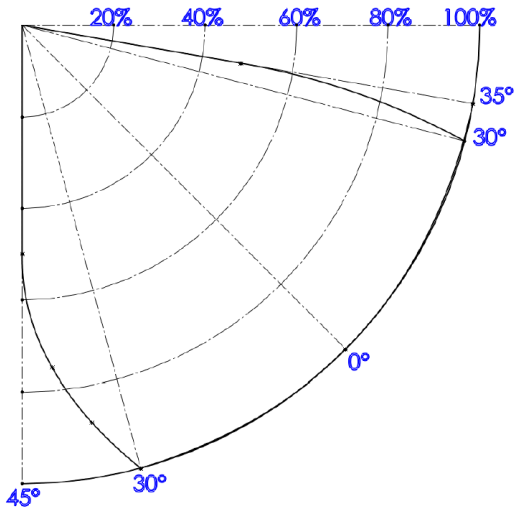

Figure 12 : Vertical field of view

Environment

⚠ Environmental conditions including but not limited to dust, snow or rain can reduce the detectors sensitivity and require additional consideration.

Hot Work

⚠ Arc welding should not be performed within 12 ft. (3.5m) of the detector. It is recommended that the system be inhibited during welding operations in situations where the possibility of a false alarm cannot be tolerated.

- ⚠ Gas welding requires a system inhibit, since the gas torch is an actual fire.
- ⚠ Arc welding rods can contain organic binder materials in the flux that burn during the welding operation and are detectable by the device.
- ⚠ Welding rods with clay binders do not burn and should not be detected. However, a system inhibit is always recommended, since the material being welded may be contaminated with organic substances (paint, oil, etc.) that will burn and may be of the size that should be detected

3.2 Preparations for Installation

The installation must comply with national and local regulations and standards applicable to flame detectors (e.g., NFPA 72) and all local and common engineering practices. It is recommended to consult with the authority having jurisdiction.

Prior to installation :

- Make sure that you have all the components and tools required to complete the detector installation readily available before beginning installation. In cases where you cannot complete the installation in a single session, secure and seal the detectors and conduits before leaving site.
- Use color-coded conductors or suitable wire markings or labels for the wiring. You may use 14 to 17 AWG (2.5mm2 to 1.0mm2) multi-strand wires for the site wiring. The selection of wire gauge should be based on the number of detectors used on the same line and the distance from the control unit, in compliance with specifications.
- Individually screen twisted pair cable is recommended for RS485 terminals.
- Use suitably rating wire for the application certification and temperatures.

3.3 Required Tools

The detector can be installed using the following tools:

Tool	Function
Hex. KEY 6 mm	Vertical alignment
Hex. KEY 10 mm	Horizontal alignment
Wrench 13 mm	Mounting the detector
Flat Screwdriver 6 mm	Ground screw connection
Flat screwdriver 3.5mm	Terminal connection

3.4 Certification Instructions

WARNING

- Do not open the detector, even when isolated, when flammable atmosphere present.
- The equipment may be used in hazardous areas with flammable gases and vapors with apparatus groups IIC, IIB and IIA and with temperature classes T1, T2, T3, T4 and T5. See details of the explosion proof approvals in section 10.6.
- The equipment is certified for use in ambient temperatures in the range of

T6 Ta= -58°F ≤Ta≤ +140°F (-50°C ≤Ta≤ +60°C) or

T5 Ta= -58°F ≤Ta≤ +167°F (-50°C ≤Ta≤ +75°C) or

T4 Ta= -58°F ≤Ta≤ +185°F (-50°C ≤Ta≤ +85°C)

and should not be used in temperatures outside this range.

- Installation shall be carried out in accordance with the applicable code of practice by suitably trained personnel.
- Inspection and maintenance of this equipment shall be carried out by suitably trained personnel in accordance with the applicable code of practice.
- If the equipment is likely to come into contact with corrosive and/or other harsh substances, consult with the relevant technical persons to take suitable precautions to prevent the detector from being adversely affected, thus ensuring that the type of protection is not compromised.
- Harsh substances: For example, acidic liquids, gases, or solvents that may attack the windows, metals, seals or polymeric materials.
- Suitable precautions: For example, regular checks as part of routine inspections or establishing from the material's data sheet that it is resistant to specific chemicals.

Specific conditions for use

- The equipment is not intended to be repaired by the user. Repair of this equipment shall be carried out by the manufacturer in accordance with the applicable code of practice.
- The flame paths are not intended for repair. Contact the manufacturer if the flame paths are damaged.
- Consult the manufacturer for genuine replacement cover and housing to connection box fasteners. M6x1x18 Hexagonal Socket head fasteners with a minimum of ISO 4762 Grade A4 Class 80 are acceptable alternatives.
- One suitably certified stopping plug is supplied with the detector.
- The external earthing connection consists of cable lug with M5x10 stainless steel screw, the terminals is suitable for connection of a wire of maximum 2.5mm^2 / 14AWG.
- The internal terminals are suitable for connection of a wire equal to or greater than the power input wiring and at a minimum of 1mm^2 / 17AWG conductor.

3.5 Mounting the Tilt Mount

The tilt mount enables the detector to be rotated up to 45 degrees (horizontal/vertical) in all directions. The following installation instructions show how to use it to support the detector from below (the preferred method).

To install the tilt mount:

a) Mount the tilt mount base (Figure 15) to a solid structure using four suitable fixings through the four 7mm (0.28") diameter holes. Four captive screws with spring washers are provided in the tilt mount.

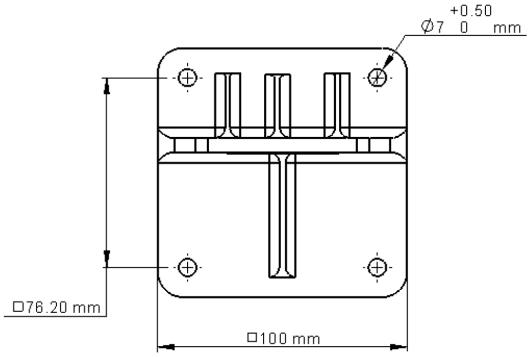

Figure 13 : Tilt Mount Base - Plate View

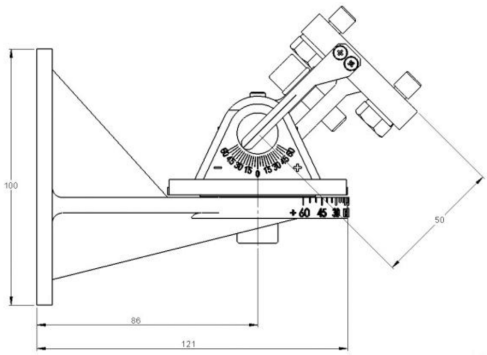

Figure 14 : Tilt mount base – Side View

3.6 Mounting the detector

Referring to Figure 13, Use the following steps to connect the detector to the tilt mount:

a) Place the detector, with its cable/conduit entries pointing down, on the holding plate of the tilt mount (item 2, Figure 15).
b) Secure the detector to the plate using the two hex screws and spring lock washers (items 3 and 4).
c) Loosen the locking screws (Items 5 and 6, Figure 15) in such a way that enables you to rotate the detector.
d) Point the detector towards the detection area and make certain that the view of the area is unobstructed.
e) Secure the detector in that position by tightening the locking screws (Items 5 and 6) on the tilt mount. (Make sure the detector is pointing in the correct direction).

The detector is now correctly mounted, aligned and ready for electrical connection. Please refer to section 3.7 for wiring instructions, and section 4 for a description of the detector's configuration settings.

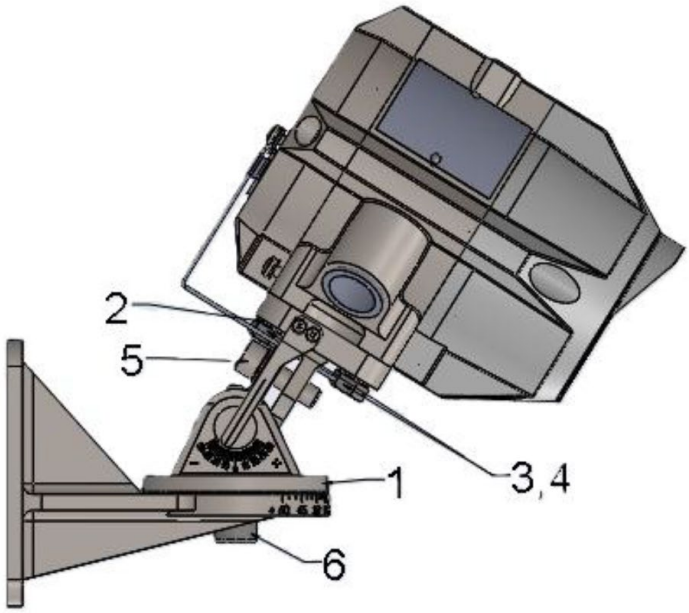

Figure 15 : Detector on Tilt mount – Side view

Item N°.	Item name
1	Tilt mount assembly
2	Holding plate
3,4	Mounting hex screws M8 and lock washers
5	HEX socket locking screw M8
6	HEX socket locking screw M12

3.7 Electrical Wiring

WARNING

- The sensor module in the front half of the detector contains no serviceable components and should never be opened. Opening will invalidate the warranty of the detector. The terminal compartment at the back is the only part of the housing that should be opened by the user.
- The detector has 16 screw terminals as shown in the following figure and table:

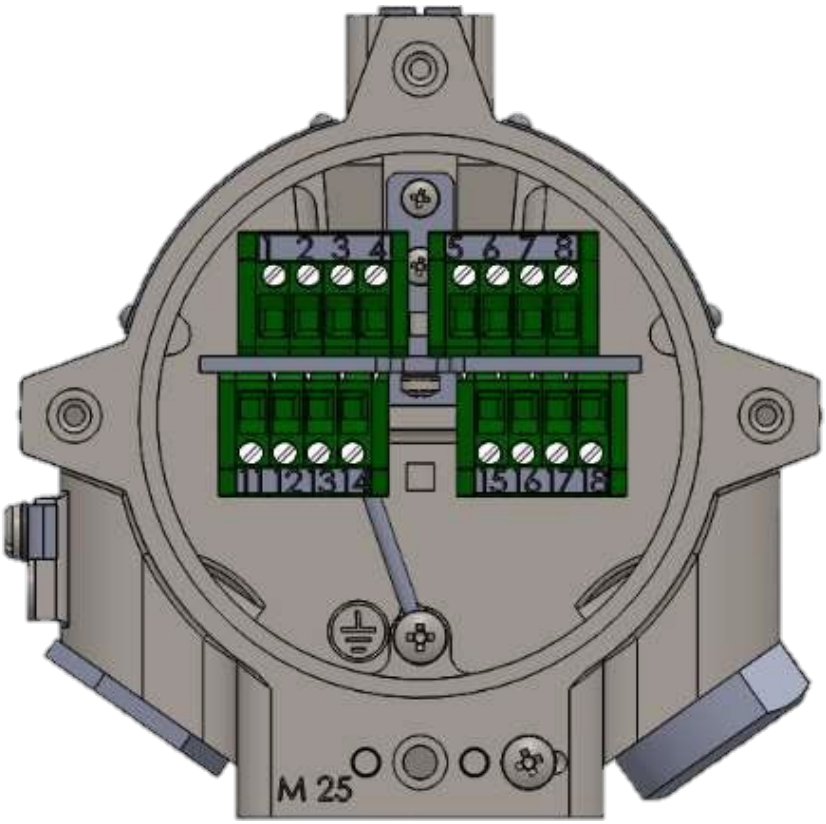

Figure 16 : Terminal View

table 1 : Terminal Connections

Pin #	Function	Description
Ground	Ground (earth)	Connected to a screw on the housing exterior.
1	24 VDC (+)	Power supply (18-32 VDC)
2	24 VDC (-)	Power supply return (0V)
3	0-20mA+ (In)	This output is used for analog 0-20 mA current output
4	0-20mA- (out)	
5	Fault Relay	A normally open SPST contact relay, that is energized (closed) when the detector is in normal operation and opens under fault condition.
6	Fault Relay COM	
7	Alarm Relay (NO)	A normally open SPST contact relay, that is open in normal operation, and closed when fire is detected. This relay can be configured to latch as described in section (3.4).
8	Alarm Relay COM	
11	24 VDC (+)	Power supply (18-32 VDC)
12	24 VDC (-)	Power supply return (0V)
13	Manual BIT activation	The manual BIT (built-in test) can be initiated by momentarily short circuiting this terminal and one of the "24 VDC (-)" terminals (2 or 12)". See 3.11 Manual BIT – Alarm Output Test for more details.
14	Shield	This terminal should be left connected to the housing internal ground screw.
15	RS 485 (+)	RS-485 Modbus communication (also used by the "Communicator" software)
16	RS 485 (-)	
17	Auxiliary Relay COM	A normally open SPST contact relay, that is open in normal operation, and closed according to the configuration used l
18	Auxiliary Relay NO	

3.8 Current Output (0-20mA) Wiring

The detector's 0-20mA current output can act as both a source or a sink transmitter and can be 3-wire or 4-wire connected.

The following drawing shows how to wire the detector to act as a current source isolated transmitter (4-wire connection):

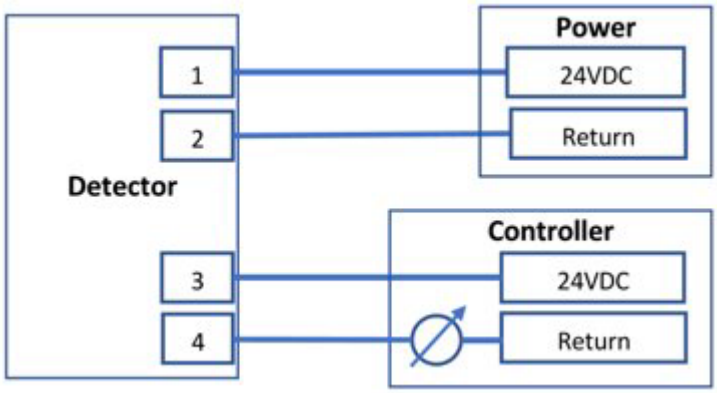

Figure 17 : Source 4-Wire Scheme

The following drawing shows how to wire the detector to act as a current sink isolated transmitter (4-wire connection):

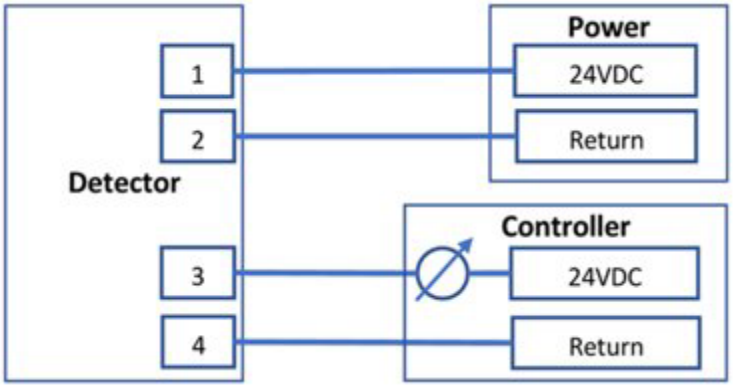

Figure 18 : Sink 4-Wire Scheme

The following drawing shows how to wire the detector to act as a current source non-isolated transmitter (3-wire connection):

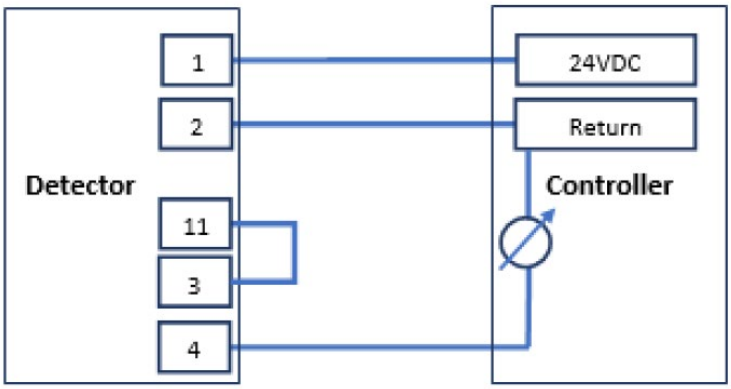

Figure 19 : Source 3-Wire Scheme

Note: Link between 3 and 11 to be wired on site

The following drawing shows how to wire the detector to act as a current sink non-isolated transmitter (3-wire connection):

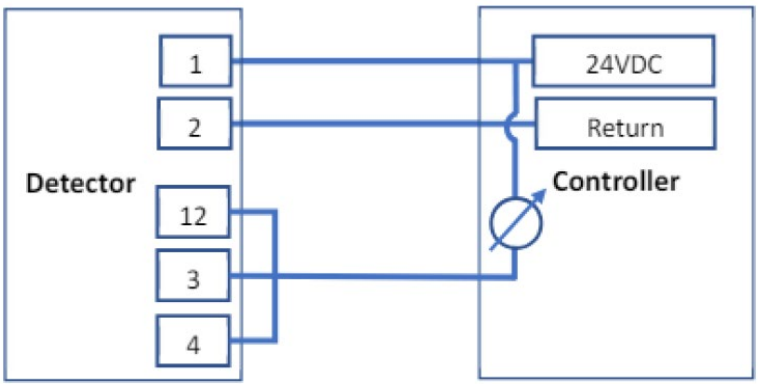

Figure 20 : Sink 3-Wire Scheme

Note: Link between 4 and 12 to be wired on site

3.9 4 Wire Relay Connection

This wiring option uses the fault and alarm relay and are connected to fire alarm panels. This connection allows to connect several detectors on 4 wires in a single loop. On the last detector there is a connected EOL resistor in the connection box. The value of the resistor depends on the control panel specification.

The number of detectors in a single loop depends on the control panels power supply capacity and length on wire width.

In fault condition, the fault relay will open the contact. The control panel will see an open loop and will report a fault.

In alarm condition, the alarm relay will close the contact and short the loop. With this configuration, the panel does not know which detector in the loop caused the alarm or fault. See figure below.

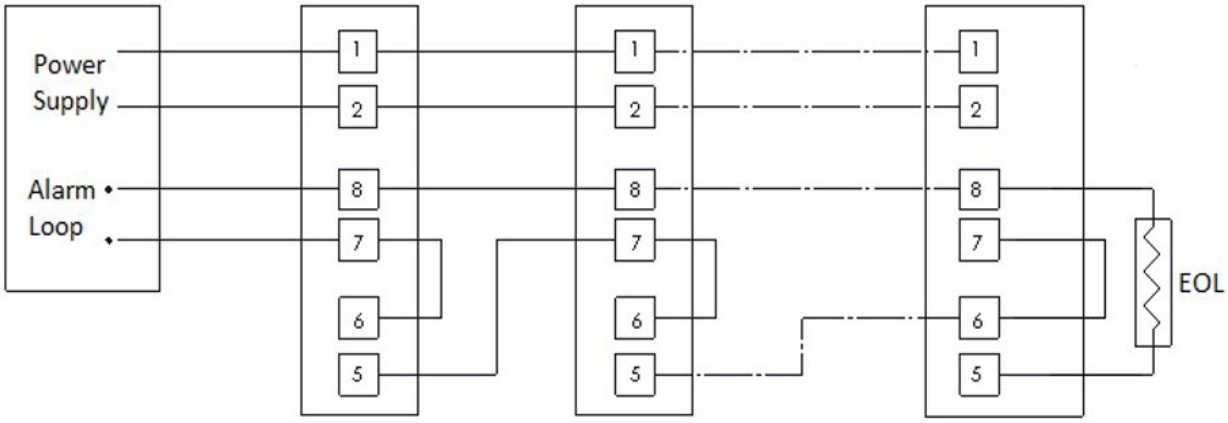

Figure 21 : 4 Wire Relay Connection

3.10 RS-485 Communication Network

Using the RS-485 network capability of the detector and communicator software, it is possible to connect up to 32 detectors in an addressable system with only 4 wires (2 for power and 2 for communication). Using repeaters, the number of detectors can be much larger (32 detectors for each repeater) up to 247 on the same 4 wires. Using the RS-485 network, it is possible to read each detector's status (fault, alarm) and to initiate a BIT to each detector individually.

The detector communicates via RS-485 with a Modbus RTU compatible protocol. For more details on the communication protocol, please see manual SG50FMODBUS

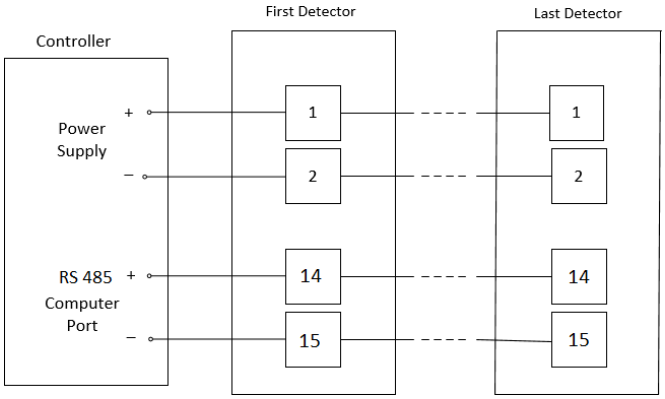

Figure 22 : **RS-485 Networking**

3.11 Cabling Recommendations

The cable used should be appropriate for the hazardous area classification and meet local, national and company regulations.

In order to comply with EMC regulations, the cable must be shielded, and the detector grounded.

The use of industrial grade, suitably armored field cable is recommended). When using HART® communications, there are some additional considerations. In particular, low capacitance cable should be used. Further detailed information can be found at the HART® Communication Foundation's website www.hartcomm.org.

3.12 Earth/Ground Regime

Any earthing regime employed must avoid earth loops. The following information is provided to assist with proper earthing of the detector

⚠ There is an earthing point on the outside of the detector enclosure for connection to Electrical ground

3.12.1 General recommendations

- In general, correctly engineered star earthing arrangements minimize earth current crosstalk and noise, improving the reliability and performance of instrumentation.
- The use of a single, screened / shielded cable for each field device ensures good screening / shielding and reduces crosstalk.

3.12.2 Field Cabling

- The entire length of the field cabling connected to a unit should be screened / shielded. The screen / shield should be connected to a low noise instrument earth at one end.
- The screens / shields of field cabling must not be connected in a manner that creates earth loops or that will result in the screens / shields carrying large currents from heavy plant or equipment.

3.12.3 Interference and noise

- Electrical equipment connected to the system should comply with applicable national or international EMC standards.
- Ideally, the 24 V supply reaching units should be free from large transients, fluctuations or high frequency noise.

- In order to reduce the likelihood of radio frequency interference affecting the operation of units it is recommended that neither units nor their cabling are installed in close proximity to the antennae of high-powered radio, radar or satellite communication equipment.

THIS PAGE IS LEFT INTENTIONALLY BLANK

4 Configuration options

Some functions of the detector can be configured using an RS-485 modem connected to a computer with the "communicator" software. For details of how to download the software please contact technical support via email at oldhamsimtronics-support@Teledyne.com or detcon-service@Teledyne.com.

These configuration options are listed in the following table along with their factory default values.

table 2 : Detector Configuration Options

Function	Options	Default Setting
Sensitivity	Low, Medium, High, Extreme	Medium
Ultra-fast detection	Disabled, Enabled	Disabled
Alarm Delay	0, 5, 10, 20 or 30 seconds	0 seconds (no delay)
Alarm Latch	Disabled, Enabled	Disabled
Enable Pre-Alarm 0-20mA	Disabled, Enabled	Disabled
Enable dirty window warning 0- 20mA	Disabled, Enabled	Disabled
Aux. relay function	Alarm Pre-Alarm UV Detected IR Detected Dirty Window Warning	Alarm
Aux. relay contact mode	Normally Open, Normlly Closed	Normally Open
Window Heater	Disabled, Enabled	Enabled
Modbus address	1 – 247	1
Manual BIT – Alarm Output Test	Disabled, Enabled	Disabled

4.1 Sensitivity

The detector can be configured to one of four sensitivity levels: low, medium, high and extreme. The following table lists for each sensitivity setting the maximum distance, in which a standard fire[1] would be reliably detected.

table 3 : Sensitivity Levels

Sensitivity level	Detection distance in feet (meters)	Number of LED flashes on Startup[2]
Low	16 (5)	2
Medium	49 (15)	3
High	75 (23)	4
Extreme	98 (30)	5

Further details about the response characteristics of the detector at the different sensitivity settings and fuel types can be found in section 11.

Note: The blink that appears when starting the detector indicates the sensitivity the detector is set to.

4.2 Ultra-Fast Detection

The ultra-fast detection feature allows detection of fireballs and explosions at 5 milliseconds. If enabled, this feature is independent of other detection algorithms and alarm delays.

4.3 Alarm Delay

When a fire is detected, the detector delays the execution of the alarm outputs up to the configured time period. After this time delay, the detector re-evaluates the situation. If a fire is still detected the alarm outputs are activated.

4.4 Alarm Latch

If alarm latch is enabled, the detector outputs will remain active even after a flame is no longer detected. To reset the detector outputs the detector must be power cycled or a manual BIT initiated.

---

[1] A standard fire is defined as a 1x1 ft^2 (0.1 m2) N-heptane pan fire, with maximum wind speed of 6.5 ft/s (2 m/s)

[2] The LED flashing that appears on startup indicates the sensivity the detector is set to. (see section 5)

4.5 Enable Pre-Alarm 0-20mA

If the Pre-Alarm is enabled and Alarm Delay is greater than 0, The detector 0-20mA output will be 16mA and the red LED will blink in case of a fire condition.

4.6 Enable dirty window warning 0-20mA

If enabled, this feature assists predictive maintenance by indicating an alert when the BIT signal is reduced by 75% of the value needed to trigger a BIT fault failure. When activated, the milliampere output will drop to 3mA and the LED will remain steady green, it should be noted that a fire signal will override the dirty window warning. A process variable of optical contamination (BIT signal level) is accessible via HART and / or MODBUS. The value of the field ranges from 0 (clean) to 100% (BIT fault).

4.7 Auxiliary Relay

The Aux relay can be set to operate in parallel to the alarm relay, at pre-alarm level or on "dirty window warning". The contact relay can be set to Normally Open mode or Normally Closed mode for all settings. When the detector is not powered, the auxiliary relay is open regardless of the configuration setting.

In order to comply with SIL2 (for relay use only) the Auxiliary relay must be connected in parallel to the alarm relay and be configured as alarm, Normally Open (default setting).

Table 4 : AUX. RELAY – NORMALLY OPEN

Aux. relay function setting	Aux. relay behaviour (in Normally Open setting)
Alarm	Closed when fire is detected. Otherwise, open.
Pre alarm	Closed in pre-alarm or fire alarm. Otherwise, open.
Dirty Window Warning	Closed when the detector window is contaminated above the warning level. Otherwise, open.
UV Only	Closed when measured UV radiation is above threshold. Otherwise, open.
IR Only	Closed when measured IR radiation is above threshold. Otherwise, open.
UV or IR	Closed when either the measured IR radiation is above threshold or the measured UV radiation is above threshold. Otherwise, Closed.Otherwise, open.

Table 5 : AUX. RELAY – NORMALLY CLOSED.

Aux. relay function setting	Aux. relay behaviour (in Normally Closed setting)
Alarm	Open when fire is detected. Otherwise, Closed.
Pre alarm	Open in pre-alarm or fire alarm. Otherwise, Closed.
Dirty Window Warning	Open when the detector window is contaminated above the warning level. Otherwise, closed.
UV Only	Open when measured UV radiation is above threshold. Otherwise, Closed.
IR Only	Open when measured IR radiation is above threshold. Otherwise, Closed.
UV or IR	Open when either the measured IR radiation is above threshold or the measured UV radiation is above threshold. Otherwise, Closed.Otherwise, Closed.

4.8 Window Heater

The detector is equipped with a heater to prevent condensation and icing on the window. If enabled, the heater is operated automatically depending on temperature.

4.9 Modbus Address

The detector can communicate with the communicator software using a Modbus RTU compatible protocol on RS-485. This protocol allows for a network of detectors to be connected, each with a unique Modbus address. The address of the detector can be set to any value in the range 1–247.

4.10 Manual BIT – Alarm Output Test (Full loop test)

When enabled, the alarm outputs are activated when a Manual BIT is initiated. See section 5.2 for details.

⚠ WARNING

Make sure all fire extinguishing actions or alarms connected to the detector are DISABLED when the manual BIT is initiated and the "Manual BIT – Alarm Output Test" is enabled as the Manual BIT will set the 0-20mA terminal to 20mA and close the alarm relay and auxiliary relay if configured.

5 Operation

On power up, the LED on the front of the detector flashes Yellow indicating the startup routine has begun. After approximately 30 seconds, if the startup is successful, the LED turns green, the 0-20mA output goes to 4mA and the fault relay is closed.

Detector configuration settings can be changed as described in section 3.7. To restart the detector, cycle the power.

5.1 Output Signals

The detector has the following output signals:

- Current output (0–20mA) with HART® 7
- Relays (Fault, Auxiliary and Alarm)
- Modbus RS-485
- Tri-color status LED

table 6 : Output Signal

	Output	0 – 20mA	Fault Relay (NC)	Alarm Relay (NO)	Aux Relay	LED
State	Startup	1mA	Open	Open	Section 4.7	Flashing Yellow
	Fault	1mA	Open	Open		Flashing Yellow
	BIT fault	2mA	Open	Open		Yellow
	Dirty Window Warning	3mA [3]	Closed	Open		Green
	Normal	4mA	Closed	Open		Green
	IR Radiation detected	8mA	Closed [6]	Open		Green
	UV Radiation detected	12mA	Closed [6]	Open		Green
	Pre Alarm	16mA [4]	Closed [6]	Open		Flashing red
	Fire Alarm	20mA	Closed [5]	Closed		Red

[3] 3mA when "Enable dirty window warning 0-20mA" enabled. 4mA when "Enable dirty window warning 0-20mA" disabled.
[4] 16mA when "Enable Pre-Alarm 0-20mA" enabled. 4mA when "Enable Pre-Alarm 0-20mA" disabled.
[5] Fault relay will be open in IR detected, UV detected, pre-alarm and fire alarm states, if there is a BIT (Dirty Window) fault

5.2 Testing

The detector has a Built-In-Test (BIT) capability to ensure proper operation and to indicate when the windows are dirty. The BIT process runs automatically at startup and periodically during the operation of the detector. The BIT can also be initiated manually by short circuiting the "Manual BIT" terminal and the "24 VDC (-) "terminal for one second (see Table 1) or by using the communicator software (connected through RS-485).

In case of "Dirty Window" fault the detector may still detect flames but at a lower sensitivity.

When "Manual BIT – Alarm Output Test" feature is enabled (see section 4.10), a successful Manual BIT will activate the following alarm outputs for a few seconds:

1. The LED in the front of the detector will turn red.
2. The 0-20mA current output will be set to 20mA.
3. The alarm relay will close.

⚠ WARNING

Make sure all fire extinguishing actions or alarms connected to the detector are DISABLED, when the manual BIT is initiated and the "Manual BIT – Alarm Output Test" is enabled, as the manual BIT will set the 0-20mA terminal to 20mA and close the alarm relay

5.3 Flame Simulator

Flame simulators are often used by industry to perform detector testing during installation and periodic end to end testing of a flame detector alarm system. Refer to the Spyglass Flame simulator manual SP-F-SIM for full instructions.

6 Maintenance

After powering up, the detector should work maintenance free. Regular checks should be in the form of a physical inspection and to periodically ensure the optical surfaces are clean (windows and reflective mirror). It is also recommended to perform a function test annually or in line with local requirements, whichever is the sooner.

⚠ WARNING

The sensor module in the front half of the detector contains no serviceable components and should never be opened. The terminal compartment at the back is the only part of the housing that should be opened by the user. Any violation of these instructions will invalidate the warranty.

6.1 Cleaning Procedure

To clean the detector:

a) Disconnect the power to the unit and disable/inhibit any extinguishing equipment that is connected to the unit.
b) Use water and detergent to clean the detector windows and underside of the reflector. Rinse with a soft cloth, cotton swab, or tissue.
c) Where dust, dirt or moisture accumulates on the window, first clean the window with a soft optical cloth and detergent, and then rinse with a clean soft cloth, cotton swab, or tissue. If contamination continues to be an issue consider using the air shield.

THIS PAGE IS LEFT INTENTIONALLY BLANK

7 Troubleshooting

Use the table below to help troubleshoot any detector operational issues.

table 7 : Common Troubleshooting Suggestions

Detector Status	Possible Cause	Corrective Action
LEDs Off Fault Relay is open Current output at 0mA	No power to the unit	Check that the power is connected to the detector. Check power polarity. Check wiring in the detector.
Yellow LED constantly on Fault Relay is open Current output at 0mA – 1mA	Power problems	Check the voltage between the "24VDC (+)" and "24VDC (-)" terminals to verify that it is in the allowed range (see section10.3)
Yellow LED constantly on Fault Relay is open 0–20mA at 2mA	BIT Fault	Clean detector window. Restart the detector (by turning the power off and then back on).
Green LED constantly on Fault Relay is closed 0–20mA at 3mA	Dirty Window Warning	Clean detector window. Restart the detector (by turning the power off and then back on).
Red LED constantly on Alarm Relay closed and current output is at 20mA	Detector is in alarm latch mode	Restart the detector (by turning the power off and then back on) or perform a manual BIT.
Alarm Relay closed and current output is at 20mA	Detector is exposed to a flame	Check cause of alarm. If caused by "friendly fire", re-position the detector so that it is not affected by it.
Fast flashing Yellow LED	Power problems	Cause of Low voltage.

THIS PAGE IS LEFT INTENTIONALLY BLANK

8 Servicing

The detector contains no user serviceable parts. In the event the detector has been damaged or is deemed to not be working properly, it should be returned to the manufacturer for repair. For technical assistance and to request a returns authorization number contact technical support via email at oldhamsimtronics-support@Teledyne.com or detcon-service@Teledyne.com.

THIS PAGE IS LEFT INTENTIONALLY BLANK

9 Communicator Software

The Communicator software can be used to configure and monitor the Spyglass-UV-IR flame detector. The software communicates using Modbus over an RS-485 port to the detector. Modbus commands enable the user to configure parameters and monitor the status of the detector. For details of how to download the software and be sent a copy of the manual please contact technical support via email at oldhamsimtronics-support@Teledyne.com or detcon-service@Teledyne.com.

THIS PAGE IS LEFT INTENTIONALLY BLANK

10 Specifications

10.1 Fire Detection

- Detection time and distance:
- SG50-F-UV-IR:
  - 5ms - for fast fire burst or explosion
  - 1s - for 1ft^2 (0.1m^2) N-heptane pan fire at 0-50 ft (0-15m)
  - <2s - for 1ft^2 (0.1m^2) N-heptane pan fire at 50-100 ft (15-30m)
- SG50-F-UV-IR-F
  - 5ms - for fast fire burst or explosion
  - 1.5s - for 1ft^2 (0.1m^2) N-heptane pan fire at 0-50 ft (0-15m)
  - <3s - for 1ft^2 (0.1m^2) N-heptane pan fire at 50-100 ft (15-30m)
- Field of view: 90° Horizontal, 80° Vertical
- Time Delay: 0-30 seconds (adjustable)
- Built-in test: Automatic and Manual

10.2 Electrical Specifications

- Operating Voltage: 24 VDC nominal (18-32 VDC)
- Current Consumption:
  - Standby 120mA
  - Maximum 180mA all systems in operation (including window heater)
- Cable Entries: 2x conduit entries 3/4" NPT or M25x1.5, with one entry plugged with a certified stopper.
- Wiring: 14-17AWG (1.0-2.5mm^2)

10.3 Outputs

- Relays: Volt-free contacts rated 2A at 30 VDC
  - **Alarm: Normally open**
  - **Auxiliary: Normally open**
  - **Fault[6]: Normally closed when detector is operating without fault**
- 0-20mA current output:
  - 3 wire and 4 wire (isolated) configurations, both sink or source.
  - Max load: 500Ω at 18-32VDC.
  - Supports HART®7 communication.
  - The following table lists the 0-20 mA output at different detectors statuses:

Detector status	Output
Fault	0 mA or 1 mA ±0.1mA
BIT Fault	2 mA ±0.2mA
Dirty window warning	3 mA ±0.2mA
Normal	4 mA ±0.2mA
IR Detected	8 mA ±0.3mA
UV Detected	12 mA ±0.3mA
Pre-alarm	16 mA ±0.3mA
Alarm	20 mA ±0.3mA

- Tri-colour LED indication
- Modbus RTU compatible Protocol on RS-485

[6] The FAULT relay will normally be energized and the contact will be closed during normal operation of the detector The contact will be open at fault condition or low voltage.

10.4 Mechanical Specifications

- Size: 5.83 x 4.65× 4.65” (148×118×118mm)
- Weight:
  - Detector (Stainless Steel 316): 6.6 lbs. (3 kg)
  - Tilt mount (Stainless steel 316): 3.3 lbs. (1.5 kg)

10.5 Environmental Specifications

- Temperature Range:
  - Operating and storage -67°F to + 185°F (-55°C to +85°C)
- Humidity: up to 99%, non-condensing
- Ingress Protection: IP66 & IP68 (2m, 24hr); NEMA 4X & 6P

10.6 Product Labeling

10.6.1 Ex db

P/N S/N Mfg. Date

ICQC 22 ATEX 0484 X

II 2 G D CE 2575 UKCA 1725

Ex db IIC T5 Gb Ex tb IIIC T95°C Db -55°C<Ta<75°C
Ex db IIC T4 Gb Ex tb IIIC T105°C Db -55°C<Ta<85°C
IP66 & 68 (2m, 24hr)

FM22CA0054X
FM22US0074X

Class I, Div. 1, Groups B, C & D; T4
Class I, Zone 1, AEx/Ex db IIC T4 Gb
T4 -50°C≤Ta≤85°C
T5 -50°C≤Ta≤75°C

FM C US APPROVED

FM22UKEX0142X IECEx FMG22.0018X

Ex db IIC Gb T4 -50°C<Ta<85°C EN 54-10
Ex db IIC Gb T5 -50°C<Ta<75°C UKE1017
Type 4X/6P
Vin: 18-32 VDC Imax: 180mA Standby: 120mA

TELEDYNE GAS AND FLAME DETECTION
14880 Skinner Road, Cypress TX, 77429 USA

⚠ Warning / Attention

Read and understand instruction manual before operating. Do not open when an explosive atmosphere is present. Seal All Conduits within 18 inches.
Do not open when energized.

Lire et comprendre le manuel d instruction avant l' utilisation. Ne pas ouvrir quand une atmosphère explosive est présente. Sceller tous les conduits pour les 18 pouces. De pas ouvrir lorsqu'il est sous tension.

10.6.2 Ex db eb

P/N S/N Mfg. Date

ICQC 22 ATEX 0484 X

II 2 G D CE 2575 UKCA 1725

Ex db eb IIC T5 Gb Ex tb IIIC T95°C Db -55°C<Ta<75°C
Ex db eb IIC T4 Gb Ex tb IIIC T105°C Db -55°C<Ta<85°C
IP66 & 68 (2m, 24hr)

FM22CA0054X
Class I, Div. 1, Groups B, C & D; T4
Class I, Zone 1, AEx/Ex db IIC T4 Gb

FM22US0074X
T4 -50°C≤Ta≤85°C
T5 -50°C≤Ta≤75°C

FM C US APPROVED

FM22UKEX0142X IECEx FMG22.0018X

Ex db IIC Gb T4 -50°C<Ta<85°C EN 54-10
Ex db IIC Gb T5 -50°C<Ta<75°C UKE1017
Type 4X/6P
Vin: 18-32 VDC Imax: 180mA Standby: 120mA

TELEDYNE GAS AND FLAME DETECTION
14880 Skinner Road, Cypress TX, 77429 USA

⚠ Warning / Attention

Read and understand instruction manual before operating. Do not open when an explosive atmosphere is present. Seal All Conduits within 18 inches.
Do not open when energized.

Lire et comprendre le manuel d instruction avant l' utilisation. Ne pas ouvrir quand une atmosphère explosive est présente. Sceller tous les conduits pour les 18 pouces. De pas ouvrir lorsqu'il est sous tension.

10.7 Approvals

Note: All items are designed and tested to meet the relevant requirements.

- Explosion proof:
  - ATEX: II 2 G D
    Ex db IIC T5 Gb or Ex db eb IIC T5 Gb and Ex tb IIIC T95°C Db -55°C<Ta<75°C
    Ex db IIC T4 Gb or Ex db eb IIC T4 Gb and Ex tb IIIC T105°C Db -55°C<Ta<85°C
  - UKCA:
    Ex db IIC T5 Gb -50°C<Ta<75°C
    Ex db IIC T4 Gb -50°C<Ta<85°C
  - IECEx, PESO, InMetro:
    Ex db IIC T5 Gb -50°C≤Ta≤75°C
    Ex db IIC T4 Gb -50°C≤Ta≤85°C
  - FM & FMC:
    Class I, Div. 1, Groups B, C & D; T4
    Class I, Zone 1, AEx/Ex db IIC T4 Gb
    T4 -50°C≤Ta≤75°C or
    T5 -50°C≤Ta≤85°C

- Performance:
  - ANSI FM 3260
  - EN 54-10

- Functional safety: Certified as SIL 2 per IEC 61508.

10.8 Electromagnetic Compatibility

The detector fully complies with EMC directive 2014/30/EU and protected against interference caused by RFI and EMI. The cables to the detector must be shielded and the detector must be grounded in order to comply to the EMC directive.

11 Performance SG50-F-UV-IR

The following tables show test results of detection distances and times for different fire scenarios. Each table lists results for a different sensitivity setting. For liquid fires the size of fire refers to the size of the pan, filled with the fuel. For gas fires the length of the plume is listed.

11.1 SG50-F-UV-IR-ASX1

Extreme Sensitivity

Fuel	Size	Distance Feet (m)	Average Response Time (Seconds)
N-Heptane	1 x 1 ft	98 (30)	2.0
Gasoline	1 x 1 ft	98 (30)	1.8
Diesel	1 x 1 ft	75 (23)	2.6
Jet Fuel	1 x 1 ft	75 (23)	3.3
Kerosene	1 x 1 ft	75 (23)	1.8
Methanol	1 x 1 ft	52 (16)	0.8
Ethanol	1 x 1 ft	62 (19)	4.1
Isopropanol	1 x 1 ft	75 (23)	2.2
Polypropylene	1 x 1 ft	49 (15)	1.4
Paper	1 x 1 ft	33 (10)	1.2
Hydrogen	32-in Plume	66 (20)	6.4
Syngas*	32-in Plume	59 (18)	3.2
Methane	32-in Plume	59 (18)	1.4
LPG	32-in Plume	75 (23)	1.2
Gasoline	2 x 2 ft	197(60)	3.3

High Sensitivity

Fuel	Size	Distance ft (m)	Average Response Time (Seconds)
N-Heptane	1 x 1 ft	75 (23)	1.7
Jet Fuel	1 x 1 ft	56 (17)	1.8
Methanol	1 x 1 ft	43 (13)	3.2
LPG	32-in Plume	56 (17)	1.6

Medium Sensitivity

Fuel	Size	Distance ft (m)	Average Response Time (Seconds)
N-Heptane	1 x 1 ft	49 (15)	1.0
Gasoline	1 x 1 ft	49 (15)	1.3
Diesel	1 x 1 ft	36 (11)	1.2
Jet Fuel	1 x 1 ft	36 (11)	1.2
Kerosene	1 x 1 ft	36 (11)	0.9
Methanol	1 x 1 ft	30 (9)	1.3
Ethanol	1 x 1 ft	31 (9.5)	2.9
Isopropanol	1 x 1 ft	36 (11)	0.8
Polypropylene	1 x 1 ft	23 (7)	0.9
Paper	1 x 1 ft	23 (7)	1.0
Hydrogen	32-in Plume	33 (10)	1.0
Syngas*	32-in Plume	33 (10)	1.2
Methane	32-in Plume	30 (9)	0.9
LPG	32-in Plume	33 (10)	1.2

Low Sensitivity

Fuel	Size	Distance ft (m)	Average Response Time (Seconds)
N-Heptane	1 x 1 ft	16 (5)	1.0
JP5	1 x 1 ft	16 (5)	1.2
Methanol	1 x 1 ft	10 (3)	2.7
LPG	32-in Plume	13 (4)	1.2

*Syngas mixture: 30% volume methane (CH_4), 70% volume hydrogen(H_2)

11.2 SG50-F-UV-IR-ASX5

Medium Sensitivity

Fuel	Size	Distance ft (m)	Average Response Time (Seconds)
N-Heptane	1 x 1 ft	33 (10)	0.1
Jet Fuel	1 x 1 ft	27 (8)	0.2
IPA	1 x 1 ft	30 (9)	0.2
Hydrogen	32-in Plume	33 (10)	0.2

Syngas*	32-in Plume	33 (10)	0.2
Methane	32-in Plume	30 (9)	0.3
LPG	32-in Plume	33 (10)	0.2

Low Sensitivity

Fuel	Size	Distance ft (m)	Average Response Time (Seconds)
LPG	32-in Plume	13 (4)	0.2

*Syngas mixture: 30% volume methane (CH_4), 70% volume hydrogen(H_2)

11.3 False Alarm Immunity

The following table shows test results of false alarm immunity for detectors configured to "Extreme" sensitivity. For each radiation source a distance is listed. This is the minimum tested distance, from which the detectors did not alarm when exposed to the radiation source (either modulated or non-modulated).

False Stimuli only at Extreme Sensitivity SG50-F-UV-IR-ASX0, SG50-F-UV-IR-ASX1, SG50-F-UV-IR-ASX5

False Alarm Source	Maximum Distance in ft (m)
Sunlight, Direct, Reflected	N.R.
Incandescent frosted glass light, 300W	N.R.
Fluorescent, 70W (3x23.3W)	N.R.
Electric arc	N.R.
Arc welding	10 (3)
Radiation heater, 1850W	N.R.
Quartz lamp (1000W) shielded	N.R.
Quartz lamp (500W) non-shielded	7 (2)
Mercury vapor lamp 160Wx3	N.R.
Car Exhausts	N.R.
Projector led	N.R.
Solenoid bell	N.R.
Soldering iron	N.R.
Electric Drill	N.R.

N.R. – No response at any distance. The shortest test distance was 2ft (0.5m).

12 Performance SG50-F-UV-IR-F

The following tables show test results of detection distances and times for different fire scenarios. Each table lists results for a different sensitivity setting. For liquid fires the size of fire refers to the size of the pan, filled with the fuel. For gas fires the length of the plume is listed.

12.1 SG50-F-UV-IR-F-ASX0, SG50-F-UV-IR-F-ASX1

Extreme Sensitivity

Fuel	Size	Distance Feet (m)	Average Response Time (Seconds)
N-Heptane	1 x 1 ft	98 (30)	3.2
Gasoline	1 x 1 ft	98 (30)	3.4
Diesel	1 x 1 ft	75 (23)	4.3
Jet Fuel	1 x 1 ft	75 (23)	7.0
Kerosene	1 x 1 ft	75 (23)	2.9
Methanol	1 x 1 ft	59 (18)	3.6
Ethanol	1 x 1 ft	72 (22)	4.5
Isopropanol	1 x 1 ft	75 (23)	2.8
Polypropylene	1 x 1 ft	49 (15)	1.8
Paper	1 x 1 ft	33 (10)	2.6
Syngas*	32-in Plume	66 (20)	1.0
Methane	32-in Plume	59 (18)	1.6
LPG	32-in Plume	75 (23)	1.2
Gasoline	2 x 2 ft	197(60)	5.3

High Sensitivity

Fuel	Size	Distance Feet (m)	Average Response Time (Seconds)
N-Heptane	1 x 1 ft	75 (23)	1.6
JP5	1 x 1 ft	56 (17)	2.3
Methanol	1 x 1 ft	43 (13)	1.2
LPG	32-in Plume	56 (17)	1.6

Medium Sensitivity

Fuel	Size	Distance Feet (m)	Average Response Time (Seconds)
N-Heptane	1 x 1 ft	49 (15)	1.4
Gasoline	1 x 1 ft	49 (15)	2.7
Diesel	1 x 1 ft	36 (11)	1.6
Jet Fuel	1 x 1 ft	36 (11)	1.5
Kerosene	1 x 1 ft	36 (11)	1.4
Methanol	1 x 1 ft	30 (9)	1.3
Ethanol	1 x 1 ft	31 (9.5)	1.2
Isopropanol	1 x 1 ft	36 (11)	1.4
Polypropylene	1 x 1 ft	23 (7)	1.7
Paper	1 x 1 ft	23 (7)	2.0
Syngas*	32-in Plume	33 (10)	1.2
Methane	32-in Plume	30 (9)	0.9
LPG	32-in Plume	33 (10)	1.3

Low Sensitivity

Fuel	Size	Distance Feet (m)	Average Response Time (Seconds)
N-Heptane	1 x 1 ft	16 (5)	0.9
JP5	1 x 1 ft	16 (5)	2.6
Methanol	1 x 1 ft	10 (3)	1.1
LPG	32-in Plume	13 (4)	1.0

*Syngas mixture: 30% volume methane (CH_4), 70% volume hydrogen(H_2)

12.2 SG50-F-UV-IR-F-ASX5

Medium Sensitivity

Fuel	Size	Distance Feet (m)	Average Response Time (Seconds)
N-Heptane	1 x 1 ft	33 (10)	0.2
Jet Fuel	1 x 1 ft	27 (8)	0.3
IPA	1 x 1 ft	30 (9)	0.1
Syngas*	32-in Plume	30 (9)	0.1
Methane	32-in Plume	30 (9)	0.2
LPG	32-in Plume	33 (10)	0.2

Low Sensitivity

Fuel	Size	Distance Feet (m)	Average Response Time (Seconds)
LPG	32-in Plume	13 (4)	0.1

*Syngas mixture: 30% volume methane (CH_4), 70% volume hydrogen(H_2)

12.3 False Alarm Immunity

The following table shows test results of false alarm immunity for detectors configured to "Extreme" sensitivity. For each radiation source a distance is listed. This is the minimum tested distance, from which the detectors did not alarm when exposed to the radiation source (either modulated or non-modulated).

False Stimuli only at Extreme Sensitivity SG50-F-UV-IR-F-ASX0, SG50-F-UV-IR-F-ASX1, SG50-F-UV-IR-F-ASX5

False Alarm Source	Maximum Distance in ft (m)
Sunlight, Direct, Reflected	N.R.
Incandescent frosted glass light, 300W	N.R.
Fluorescent, 70W (3x23.3W)	N.R.
Electric arc	N.R.
Arc welding	10 (3)
Radiation heater, 1850W	N.R.
Quartz lamp (1000W) shielded	N.R.
Quartz lamp (500W) non-shielded	7 (2)
Mercury vapor lamp 160Wx3	N.R.
Car Exhausts	N.R.
Projector led	N.R.
Solenoid bell	N.R.
Soldering iron	N.R.
Electric Drill	N.R.

N.R. – No response at any distance. The shortest test distance was 2ft (0.5m).

13 Ordering Information

table 8 : Ordering Information

Part Number	Description
Flame Detector	
SG50-F-UV-IR-AS11	Spyglass UV-IR, ATEX, FMus, FMc and IECEx certified, 316SS, M25 entries
SG50-F-UV-IR-AS21	Spyglass UV-IR, ATEX, FMus, FMc and IECEx certified, 316SS, 3/4"NPT entries
SG50-F-UV-IR-AS15	As Spyglass -UV-IR-AS11 but with enhanced speed of response option
SG50-F-UV-IR-AS25	As Spyglass -UV-IR-AS21 but with enhanced speed of response option
SG50-F-UV-IR-F-AS11	Spyglass UV-IR-F, ATEX, FMus, FMc and IECEx certified, 316SS, M25 entries
SG50-F-UV-IR-F-AS21	Spyglass UV-IR-F, ATEX, FMus, FMc and IECEx certified, 316SS, 3/4"NPT entries
SG50-F-UV-IR-F-AS15	As Spyglass -UV-IR-F-AS11 but with enhanced speed of response option
SG50-F-UV-IR-FV-AS25	As Spyglass -UV-IR-F-AS21 but with enhanced speed of response option
Detector Tilt Mount	
SP-F-TILTMOUNT-SS1	Spyglass Stainless Steel Tilt Mount
Flame Simulator Kit	
SP-F-SIM-UVIR	UV-IR Spyglass Flame Simulator Kit Including Carry Case, Simulator, Carrying Strap, Charger and Manual
Flame Simulator Spare Parts	
SP-F-SIM-CASE	Carrying Case
SP-F-SIM-STRAP	Carrying Strap
SP-F-SIM-TOOL	Cover Removal Tool
SP-F-SIM-ALLEN	Allen Key
SP-F-SIM-CHRGR	Power Supply and Charger
SP-F-SIM-BATT	Replacement Battery

Part Number	Description
Flame Detector Accessories	
SP-F-WEATHERCOVER-1	Weather Cover, Stainless Steel
SP-F-POLEMOUNT-23	Pole Mounting Adaptor, Stainless Steel, of 2- and 3-inch pipes
SP-F-AIRSHIELD-1	Air Shield
SP-F-DMX-SO1	Duct Mount Assembly, without window. Use with SP-F-AIRSHIELD-1 (Solde separately
SP-F-DMW-SO1	Duct Mount Assembly, with sapphire window.
Communications	
SP-F-USB-RS485	RS485 to USB Converter (for connection of detector RS485 output to PC/Laptop for use with Communicator Software)

14 Appendix A

HART 7 Communications

Highway Addressable Remote Transducer (HART®) establishes digital data communication over 4-20mA Current Loop cables. The HART protocol uses FSK modulation signals superimpose at low level on top of the 4-20mA current.

The HART implementation on the Spyglass UV-IR-V Flame Detector allows the Control Unit to monitor the status of the detector, settings of User Configuration and initiate field diagnostics.

The HART protocol implemented in this flame detector is corresponds to HART rev. 7.0. It supports HART Universal commands including Common Practice and Device Specific Commands. For more detail information see manual SG50FHART-MANUAL-EN

TELEDYNE
GAS AND FLAME DETECTION
Everywhereyoulook™

AMERICAS
4880 Skinner Rd
Cypress, TX 77429
USA
Tel.: +1-713-559-9200

EMEA
ZI Est, Rue Orfila, CS20417
62027 Arras cedex
France
Tel.: +33 (0) 3 21 60 80 80

ASIA PACIFIC
Room 04, 9th Floor, 275 Ruiping Road, Xuhui District, Shanghai, China
TGFD_APAC@Teledyne.com

www.teledynegasandflamedetection.com

© 2025Teledyne gas and flame detection. All right reserved.

SG50FUVIR-EN Revision 2.0 /November 2025